Beaver POWER TOOLS

No. 3400 36" GAP BED LATHE

PM - 1838

DATED: 3-61

Operating and Maintenance Instructions

HELPFUL HINTS ON THE SET-UP AND OPERATION OF YOUR BEAVER

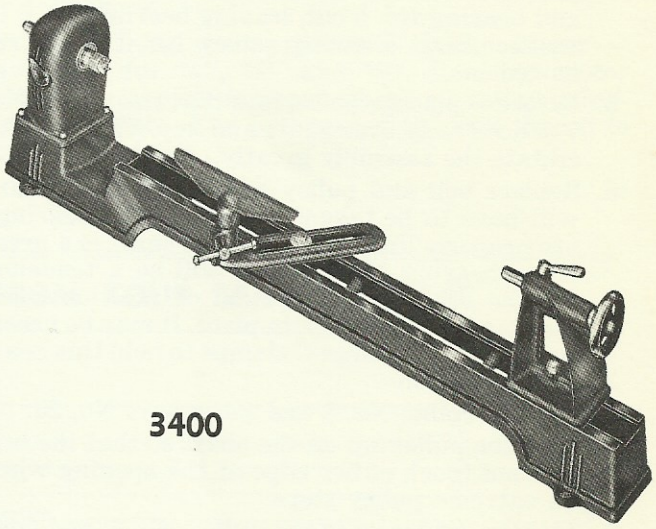

3400

GENERAL

This pamphlet is not intended as a comprehensive study of the art of wood-turning, but rather, is intended as a guide to the set-up and care of your BEAVER lathe and cutting tools and the use of the various accessories available.

Your BEAVER lathe has been designed to give you hundreds of hours of carefree running if given the proper care. The essential parts of the machine are as follows, the lathe bed, the headstock, the tailstock and the tool rest.

THE LATHE BED

Is the main or base casting and is provided with four holes for bolting to the stand or work table. The ways are carefully machined for easy movement of the tailstock and tool rest.

THE HEADSTOCK ASSEMBLY

Is firmly fastened to the left-hand end of the bed. It houses the line or power-driven spindle, 4-step-V-Pulley and belt. The headstock spindle on your BEAVER lathe is a hollow shaft, ground with a No. 2 Morse taper in the front end to receive universal Morse taper accessories. The back end of the spindle is threaded ¾ diam. 16 T.P.I., S.A.E. standard left-hand, to permit the outboard use of a face plate or sanding disc. The adapter, supplied with the lathe, is machined and ground to fit the No. 2 Morse taper in the spindle and to receive any standard No. 1 Morse taper accessories. It is also threaded ⅞ 14 THD. S.A.E. STD. on the front end to take a spur centre, face plate or sanding disc. The draw bar, also supplied, when inserted in back end of spindle and threaded into adapter, prevents any slippage which might occur between the spindle and the adapter when turning large diameter work. It also provides a convenient knock-out for the adapter when loosened a turn or two. The hollow spindle runs on two lifetime lubricated ball bearings and carries the drive pulley.

THE TAILSTOCK ASSEMBLY

Is arranged so that it may be readily moved to different positions on the bed and firmly clamped to accommodate different lengths of work. It houses the dead or fixed centre which is provided with a handwheel to permit a full 2" travel of centre to clear the work without moving tailstock assembly. A friction clamp easily and quickly locks centre in required position. The tailstock spindle is hollow with a No. 1 Morse Taper. A replaceable point cup centre and knock out rod are supplied.

THE TOOL REST ASSEMBLY

Is made up of the tool rest base and the tool rest. The base is readily adjusted and clamped in desired position along bed with wrench supplied. The tool rest is also adjustable in the base for height and angle.

PACKING LIST

The carton in which your BEAVER 36" lathe is shipped contains—a complete lathe assembled including bed, headstock assembly, tailstock assembly, spur centre and wrench.

INSTALLATION

The lathe should be bolted down to a rigid bench, preferably one that can be securely fastened to the floor. There are four holes in the bed for this purpose. Try to locate the lathe on a bench with a flat surface so that the bed of the lathe is not twisted when tightened down with bolts or lag screws. It may be necessary to use shims where a discrepancy in the flatness of the table is noted. The motor can be mounted either below or behind the machine as desired.

It is advisable to set up a rack, if at all possible, below or behind the machine to hold your chisels when not in use. Proper use of the rack will prevent the cutting edges from being burred up.

In some installations it may be found that the belt supplied is not the correct length. The following procedure should be used to change the belt:

1. Remove the two set screws No. 25.
2. Remove the collar No. 8, remembering that this is a left hand thread.
3. Remove set screw No. 24 from pulley No. 7.
4. Tap spindle with a soft hammer, towards the tailstock of the lathe. This will drive the spindle and bearing No. 5 out, leaving bearing No. 6 in position, and allowing pulley No. 7 to be removed.
5. Before replacing be certain that the pulley No. 7 slides freely over shaft and key. This will facilitate the assembly greatly.
6. Replace belt and pulley and insert shaft. Care will have to be taken to see that the bearings are properly lined up. Since the shaft is a press fit in bearing No. 6, there will be a tendency for the bearing to move out of position when tapping the shaft back in place. It may be necessary to use two large C clamps to hold this bearing in position.
7. Replace collar No. 8 and set screws No. 25.
8. Line the pulley up on the shaft so that the belt will not touch either edge of the opening when on extreme pulley steps.
9. Tighten set screw in the pulley No. 7, and your lathe is again ready to operate.

POWER REQUIREMENTS

For average work a ¼ h.p. motor will give satisfactory service. If, however, the machine is being set up for a steady run of production, a 1/3 h.p. motor will permit heavier cuts, thereby speeding up the work.

A 4-step companion pulley number 3416 is available as an accessory for this lathe. The following speeds may be attained by using this pulley.

1725 R.P.M.	1425 R.P.M.
60 cycle motor	25 cycle motor
800 R.P.M.	600 R.P.M.
1350 "	1110 "
2200 "	1810 "
3700 "	3030 "

The belt supplied is a F.H.P. V-belt 46" long.

MAINTENANCE

Your BEAVER 36" lathe is equipped with sealed-for-life ball bearings and should require no lubrication attention in the headstock. A little light machine oil on the tailstock spindle occasionally will make it easier to turn it in or out.

HINTS ABOUT STARTING A TURNING PROJECT

STARTING A PROJECT TO BE TURNED BETWEEN CENTRES

About the only tools required, other than the cutting chisels, to start a lathe project, are a scale for length measurements and a pair of calipers for diameter measurements. The first step, after the wood has been selected, is to mark centres on the ends of work piece as accurately as possible. If the work is hardwood the centres should be drilled about ⅛" deep. Place the spur centre against one end of work and tap gently with a soft hammer until spurs are well set in the wood. Here again, if the work is hardwood diagonal saw cuts in the end of the work will be necessary. Replace spur centre on spindle and while holding work firmly against it, slide the tailstock assembly to within 1" of other end of work. Tighten bolt to securely lock tailstock in position on the bed. Oil the end of the work to be supported by tailstock—this prevents burring of the centre—and, using the handwheel, advance tailstock centre to seat in end of work. Rotate work slowly, continuing to advance centre until work is difficult to turn. Retract centre by about ¼ turn of hand wheel and lock securely in position.

The next step involves the position of the tool rest. It should be about ⅛" from the work and set about ⅛" above the centre line. Small variations in these figures are permissible but the tool rest should never be below the centre line of the work. Never start the motor without first rotating the work by hand to make sure that everything is clear.

If the work is being turned from a square, as it will be in most cases, the starting cuts should be very light until a round shape is obtained. Always start the cuts from the centre and work towards the end of the project.

FACE PLATE TURNING

Any work that cannot be supported between centres is usually done on a face plate. The most common of these are the single screw centre, the 3" face plate with four screw holes and the 6" face plate with 4 slots and a series of screw holes. The work should be band sawed to within ⅛" of the finished diameter and then mounted on the face plate most suitable for the job by the use of screw nails. The right-angle tool rest is the most effective on this type of set-up, permitting the operator to work on the periphery or the face of the project without changing the set-up.

CUTTING TOOLS

The standard cutting tools used in lathe operation are identified below in order of their importance.

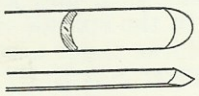

GOUGE

A round nose, hollow chisel used mainly for roughing cuts.

SKEW CHISEL

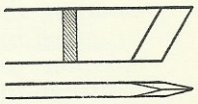

A flat chisel, double ground on an angle across the end of the chisel, used for finishing cuts.

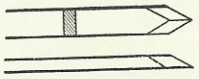

SPEAR-POINT CHISEL and ROUND-NOSE CHISEL

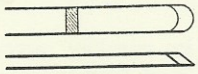

Scraping tools ground as shown and used wherever the contour of the chisel lends itself to the contour of work.

PARTING TOOL

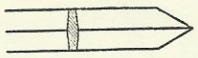

A double ground tool used for parting off the work and plunging straight cuts to diameters particularly when cutting diameter guides in contour work.

The importance of keeping a keen edge on your cutting tools cannot be too highly stressed. A keen edge is the difference between smooth work and rough, splintery work.

ACCESSORIES

The following accessories are available from your BEAVER dealer and will greatly increase the usefulness of your lathe.

6" and 10" diameter face plate, 12" sanding discs, available with right or left-hand threads. Those with the left-hand thread will fit the back end of the headstock spindle for outboard work. The diameter of work that can be turned on an outboard set-up is practically unlimited. 3" face plate, single screw centre, spur centre.

24" tool rest, used for long turnings to eliminate the bother of shifting the tool rest base. This rest necessitates the use of an extra tool rest base.

Right-angle tool rest, useful on face plate work, permitting the operator to work on both the periphery and the face of the project without shifting the tool rest.

Headstock work arbor — to fit the threaded end of the adapter, complete with collars for mounting a grinding wheel, buffing wheel or wire brush. The end of the arbor is threaded ½" x 24 thread to take a drill chuck.

Tailstock drill chuck adapter, clamps on tailstock barrel and is threaded ½" x 24 thread to take a drill chuck.

Motor shaft work arbor and chuck adapter — available for ½", ⅝" and ¾" diameter motor shaft. Is complete with collars for mounting grinding wheel, etc. End is threaded ½" x 24 thread to take drill chuck.

3400 LATHE PARTS OBTAINABLE FROM YOUR BEAVER DEALER

Key Number	Part Number	Description	Quan.
1	3401	Lathe Bed	1
2	3402-1	Headstock Body	1
3	3402-2A	Headstock Spindle	1
4	3402-2B	Headstock Spindle Adapter	1
5	3402-3	Headstock Front Bearing	1
6	3402-4	Headstock Rear Bearing	1
7	3402-5	Headstock Pulley	1
8	3402-7	Headstock Spindle Retaining Collar	1
9	3402-11	Headstock Spur Centre	1
10	3403-1	Tailstock Body	1
11	3457-1	Tailstock Spindle	1
12	3403-3	Tailstock Spindle Handwheel	1
13	3403-4 & 5	Tailstock Spindle Clamp Handle Assembly	1
14	3403-6	Tailstock Spindle Key	1
15	3403-7	Tailstock to Bed Clamp	1
16	3404-1	T. Rest Base	1
17	3404-3	T. Rest Lock Screw and Handle Assembly	1
18	3404-5	T. Rest to Bed Clamp	1
19	3418	10" T. Rest and Shaft Assembly	1
20	3408	Wrench	1
21	32-001	V. Belt F.H.P. No. 1460 (46")	1
22	3409	Beaver Trade Mark Plate	1

3400 LATHE PARTS WHICH MAY BE PURCHASED LOCALLY

23	3402-2C	Headstock Spindle Draw-Bar, Hex. Hd. Cap ⅜-16X4½	1
24	901-04-150-0217	Headstock Pulley Set Screw, Sock. Set $\frac{5}{16}$-18X½	1
25	901-04-150-0208	Headstock Collar Set Screws, Sock. Set. ¼-20X¼	2
26	927-01-010-2694	Headstock Pulley Key, Std. Woodruff No. 5	1
27	901-03-010-0750	Headstock to Bed Assembly Screws, Sock. Hd. Cap 5-16-18X1	4
28	SP-9538	Tailstock to Bed Clamp Screw Hex. Hd. Cap ½-13X2" lg.	1
29	901-01-060-0616	Base Clamp Screw, Hex. Hd. Cap ½-13X1½ lg.	1
30	901-06-450-2252	Trade Mark Drive Screws, No. 2 x $\frac{3}{16}$	2
31	3416	Motor Pulley	1
32	A-0001	Motor Pulley Sleeve	1
33	3457-2	Cup Centre	1
34	3457-4	Knock Out	1

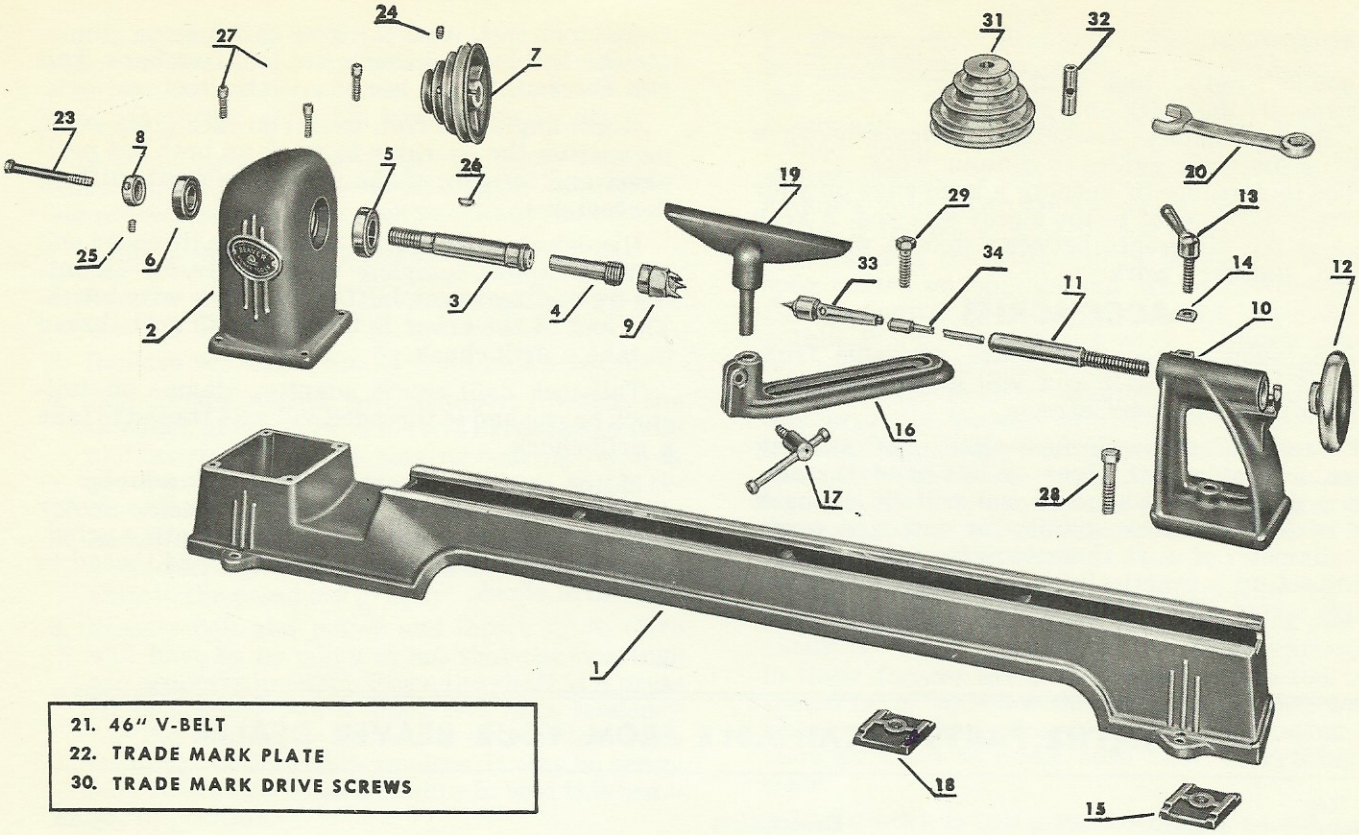

21. 46" V-BELT
22. TRADE MARK PLATE
30. TRADE MARK DRIVE SCREWS

CONSULT YOUR BEAVER DEALER FOR PRICES OF REPLACEMENT PARTS, ACCESSORIES AND TOOLS TO FACILITATE HANDLING WE SUGGEST ORDERING ALL PARTS THROUGH YOUR BEAVER DEALER

The right is reserved to make changes in design or equipment at any time without incurring any obligation to install these on machines previously sold, and to discontinue models of machines, or accessories at any time without notice.

Rockwell MANUFACTURING COMPANY OF CANADA LTD.
POWER TOOL DIVISION GUELPH - CANADA

Printed In Canada - Leaman, Guelph