Beaver Power Tools

SERVICE MANUAL

9" TILTING ARBOR SAW

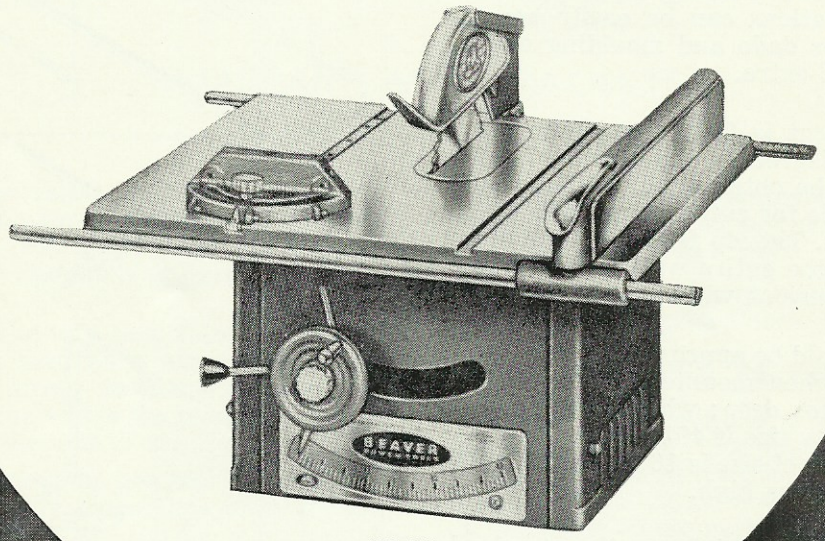

3200

Designed and Manufactured by

BEAVER POWER TOOL DIVISION

ROCKWELL MANUFACTURING CO. OF CANADA, LTD.

GUELPH CANADA

Beaver

HELPFUL HINTS ON THE SET-UP AND OPERATION OF YOUR BEAVER

9" TILTING ARBOR SAW

The Beaver 9" Bench Model Tilting Arbor Saw can perform all operations commonly done on larger and more expensive machines of its type. The working parts are enclosed in a welded steel cabinet. It is light in weight, has a large working capacity and is ruggedly designd. Cross cutting, ripping, mitering and beveling operations can be easily accomplished. Accessories for dado and moulding operations may be purchased extra.

Maximum depth of cut is 2¾ inches. When the saw blade is tilted 45 degrees to the right, 1 7/8 inches depth of cut can be obtained. The "Auto-Set" miter gage is adjustable for cuts at any angle up to 60 degrees right or left. The rip fence can be clamped at any point along the entire width of the table including the side extensions when mounted.

The table height should be approximately 34½ inches above the floor when mounted. Its size is 24 inches wide by 22 inches deep; when both side extensions are mounted, its size is 49½ inches wide by 22 inches deep. The cabinet size is 16 inches wide, 14 inches deep by 11½ inches high.

Under the basic unit, No. 9-3200, the standard parts furnished with the machine are as follows: No. 36-014 9 inch combination saw blade. CS-32067A 2¼ inch arbor pulley, rip fence and guide rails, "Auto-Set" miter gage and 34-661 table insert for saw blade.

Accessories which may be purchased as additional equipment are the No. 9-32121-S guard and splitter attachment, combination saw blades, special table inserts, Nos. 34-663 and 34-662, for dado and moulding cutter head respectively, No. 4 moulding cutter head and knives, No. CS-3236 side table extension, No. MS-9-32-100 steel stand, No. 49-362 retractable caster set, No. 864 miter gage, No. 5225 2¼ inch motor pulley or No. 5450 4½ inch motor pulley.

Refer to the photographs, drawings and Table 1 to identify the parts mentioned in the following instructions.

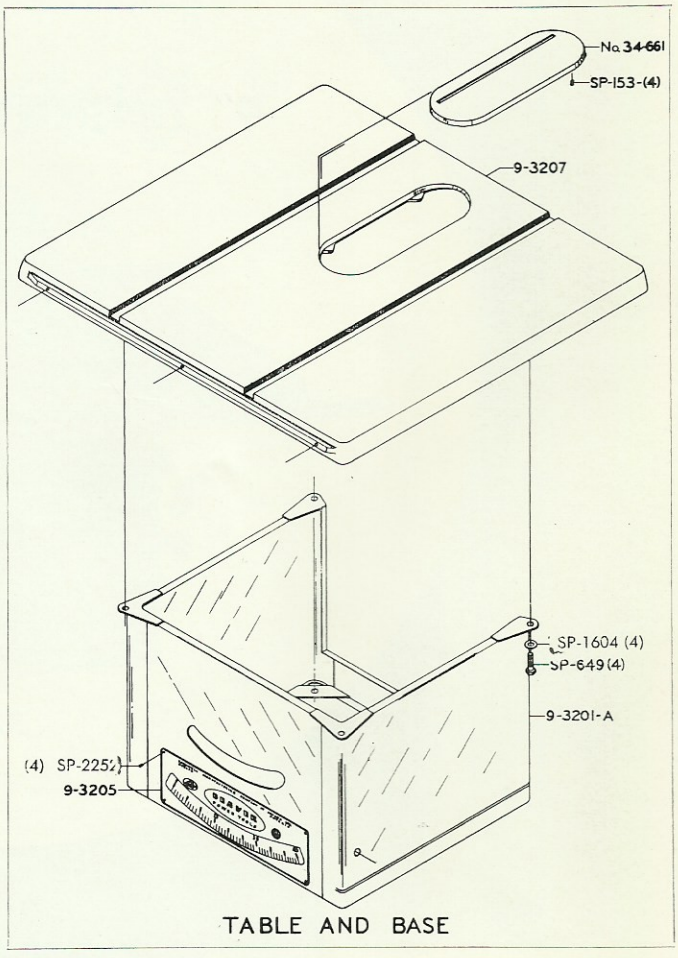

TABLE AND BASE

FIG. 1

CONSTRUCTION FEATURES

Use of a welded steel cabinet ruggedly constructed as a frame for mounting the table and carrying the working parts provides maximum safety for the operator and presents a machine of modern lines which can easily be kept in a neat condition. Details of the cabinet which allows ready access to the working parts of the machine are shown in Fig 1.

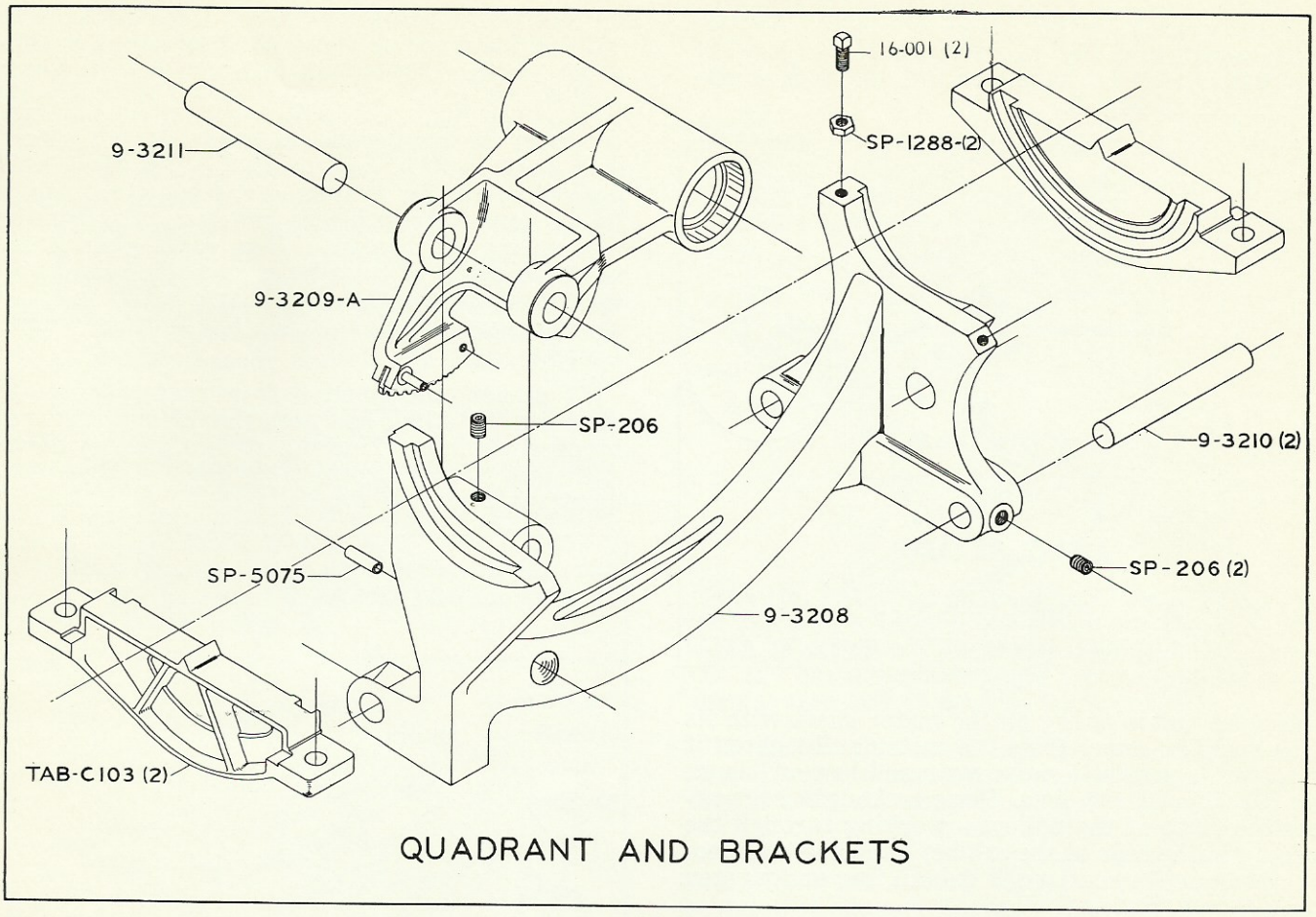

QUADRANT AND BRACKETS

FIG. 2

The use of a heavily ribbed table, side extensions, mandrel bracket, quadrant and quadrant brackets made of sturdy grey iron castings produces maximum rigidity between the working parts of the machine.

The mandrel is ground to a close tolerance and its flange is finish faced accurately after it is assembled. These manufacturing refinements assure a true running mandrel on which the blade is mounted and held square with the axis of rotation.

The saw mandrel runs in pre-lubricated sealed ball bearings, thus eliminating lubrication for the life of the bearings.

INSTALLATION

Four holes are provided in the base of the circular saw for bolting it to the table, work bench or BEAVER machine stand. It is sometimes convenient to locate the saw on the same bench as the jointer, as the operations performed on these two machines are frequently correlated. Provision should be made under the supporting bench or table for a sawdust drawer or box.

When the saw has been bolted down it is advisable to make a few checks for saw and fence alignment to ensure accurate work. The most important adjustments concern the parallelity of the saw blades, ripping fence and miter gage slots. The saw blade must be parallel to the miter fence slots. This adjustment is taken care of before the BEAVER saw leaves the factory. If, however, after the saw has been in operation for a while, a re-alignment is necessary, it may be accomplished by a slight movement of the trunnion supports where they fasten to the underside of the table.

The fence adjustment is described later under the heading the Ripping Fence.

POWER REQUIREMENTS

For average conitions, a ¾ hp motor will furnish ample power for this machine. A 4½ inch motor pulley is recommended for use with a 60 cycle 1725 rpm motor to obtain a mandrel speed of 3450 rpm. A 2¼ inch motor pulley should be used with a 60 cycle 3450 rpm motor.

Before installing the motor make sure it rotates in the right direction To run the blade forward through the table, the correct rotation of the motor is clockwise when viewed from the left side of the machine. If the motor runs the wrong way, reverse it according to the manufacturer's directions.

Before connecting the motor to the power line, be sure the electric current is of the same characteristics as stamped on the motor name plate.

Do not connect the motor to a circuit which will be overloaded. If an extension cord is used, it must have adequate capacity. All line connections should make good contact. Running on low voltage will injure the motor.

Fasten the motor to the motor plate, 9-3221, with suitable carriage bolts, fastening them loosely so the motor can be shifted to line up the motor pulley

with the mandrel pulley. It is important that the motor shaft and the mandrel shaft be parallel. Mount the motor on the motor plate as high as possible. Refer to Fig. 3.

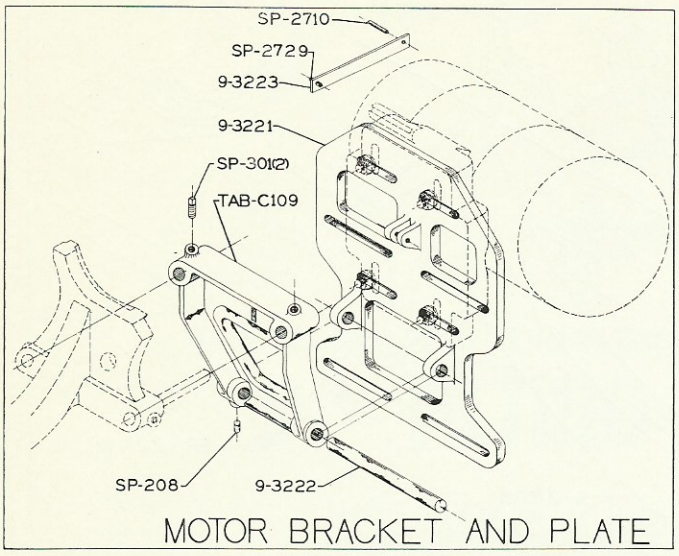

FIG. 3

Slip the motor pulley on the motor shaft with its hub extending away from the motor and tighten it in place. To prevent excess wear and loss of power, the V-belt must run true. Place a straight edge across the faces of the pulleys - working through the opening in the rear of the cabinet - and shift the motor pulley on its shaft until it is in line and tighten its set screw. Refer to Fig. 4.

All adjustments for pulley line-up must be made on the motor pulley. Do not move the arbor pulley, as it also acts as a bearing retainer.

Place the V-belt over the arbor pulley, then lift the motor plate slightly to stretch the V-belt over the motor pulley. The weight of the motor will give the V-belt the correct tension.

RAISING AND TILTING MECHANISM

The saw blade is raised by turning the handwheel to the right and lowered by turning it in the opposite direction. The pitch of the raising worm and spacing of the teeth on which it rides are such that one complete turn of the hand-wheel moves the blade approximately 5/16 of an inch.

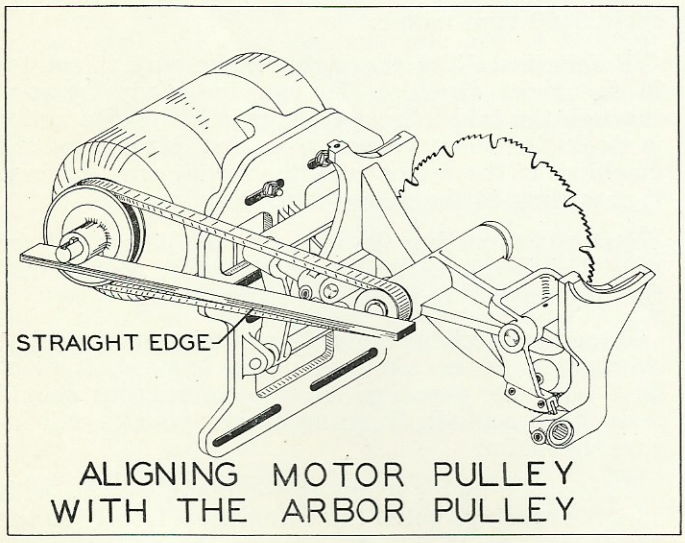

FIG. 4

The hand knob, CS-1209, which extends from the centre of the hand-wheel assembly, screws onto the steel shaft, 9-3212, and locks the saw blade at the desired height by tightening it moderately, any additional force merely places unnecessary strain upon the raising mechanism. When making an adjustment for depth of cut always raise the saw blade to the proper height, then lock it in position to avoid a slight change in height which might occur. Refer to Fig. 6.

To prevent the mandrel from raising too high, a steel pin, SP-2706, has been placed in the mandrel bracket assembly. This pin strikes against another steel pin, SP-5075, projecting from a boss on the quadrant. Refer to Fig. 2.

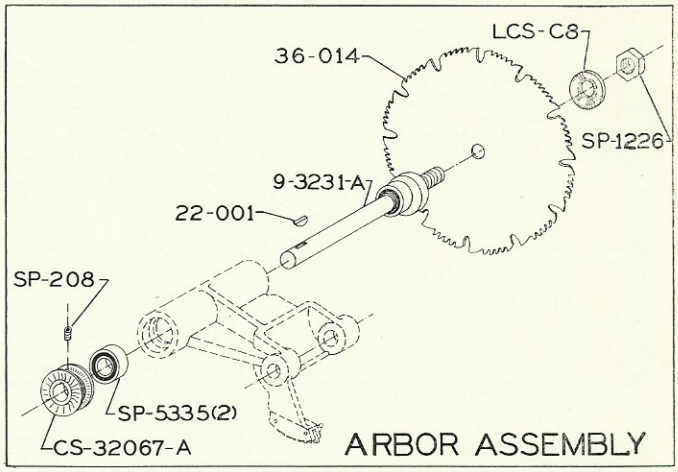

FIG. 5

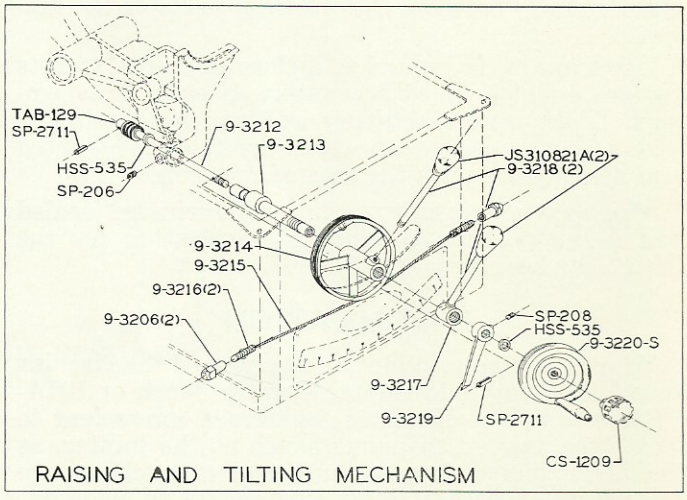

FIG. 6

This saw features an entirely new tilting mechanism which incorporates a drum and cable arrangement consisting of a sturdy grey iron cast drum and a stainless steel aircraft tiller cable. The mechanism is extremely fast acting, requiring less than one half a revolution of the tilting lever to move from 0° and 45°.

To operate the tilting mechanism loosen the locking hub, 9-3217, by lifting up on the lower or locking lever with the left hand. Then grasp the upper

or tilting lever with the right hand and move it in a clockwise direction Once the locking lever has been loosened both levers may be grasped with the right hand and moved simultaneously. The tilting mechanism must be locked in each position by tightening the locking hub, 9-3217. Refer to Fig. 6.

The cable used for the tilting mechanism is set to the correct tension at the factory. Should it be necessary at any time to tighten this cable it may be accomplished by reaching in from the back of the saw and holding the cable adjusting stud, 9-3216, with a wrench or pliers, then tightening the cable adjusting nut 9-3206. Approximately equal amount of adjustment should be made at each side. Refer to Fig. 6.

If after making any adjustments, or for individual preference you desire the locking lever in a different position this may be accomplished by loosening the locking set screw, SP-206, and turning the tilting shaft sleeve, 9-3213. Then tighten the locking set screw again. Refer to Fig. 6.

Adjustable square head set screws, 16-001, are mounted in the quadrant to provide position stops at 0° and 45°. Refer to Fig. 2.

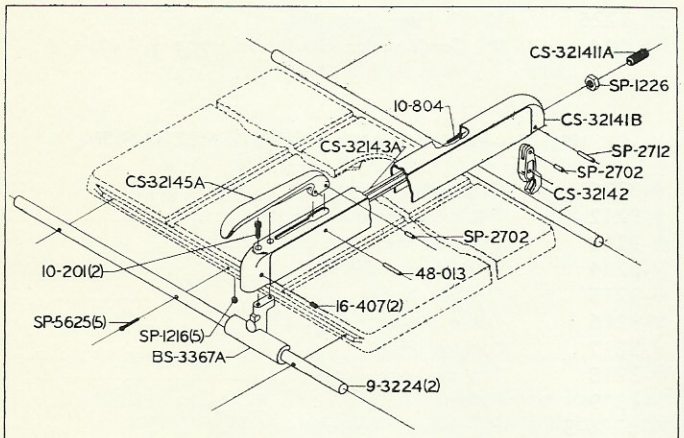

RIP FENCE AND GUIDE RAILS

FIG. 7

Place the saw blade at right angles to the table and check its squareness by using a combination square, then set the pointer, 9-3219, to the zero point. Now loosen lock nut, SP-1288, and adjust positive stop 16-001 to contact the table. Then tighten the lock nut. Move the saw to 45° position and adjust the positive stop as previously described.

THE RIPPING FENCE

Of cast construction, is ground on both sides for use on either side of the saw blade and slides smoothly on the support rails. It is readily clamped in position by means of a lever arm on one end which actuates a link-clamping bar, thereby locking both ends simultaneously. The fence is used for cutting lumber lengthwise with the grain. This operation is known as ripping or rip sawing. Refer to Fig. 7.

The fence must be parallel to the miter gage slots. If adjustment is required, loosen the clamp handle and holding the guide at mandrel end of fence against the guide rails, loosen socket head screws in top of fence and adjust by means of set screws in the side, until the fence is correctly lined up with the slot in table top. Tighten top screws.

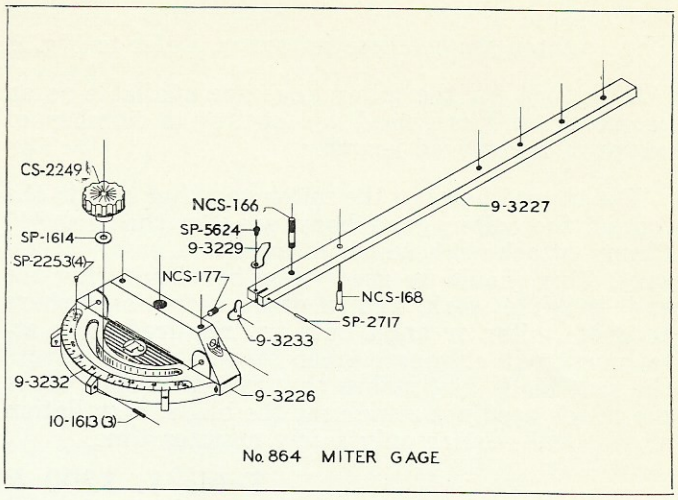

No. 864 MITER GAGE

FIG. 8

MITER GAGE

The No. 864 Miter Gage, Fig 8, has a 7 inch face and 3/8 x ¾ x 18 inch bar which fits the table slot. It can be set at any angle up to 60 degrees right or left, and has adjustable stops for instantaneous settings at zero and 45 degrees right or left.

To adjust this unit, flip the stop link, 9-3233, away from the stop screw at the 90 degree mark. Take a piece of scrap wood and make a trial cut, check the cut with a combination square resetting the gage until the cut is square. Lift the stop link and adjust the special Nylok stop screw, 10-613, bringing it against the link. Take another trial cut to recheck the setting. The right and left 45 degree stops should be adjusted in the same manner as described above. From time to time, check the accuracy of the cut by using a combination square.

The tapered pivot screw, NCS-168, holds the miter gage head so the bar can be adjusted to compensate for wear or loosening the head to suit the operator. To do this, loosen the headless set screw, NCS-177, in the face of the miter gage and adjust

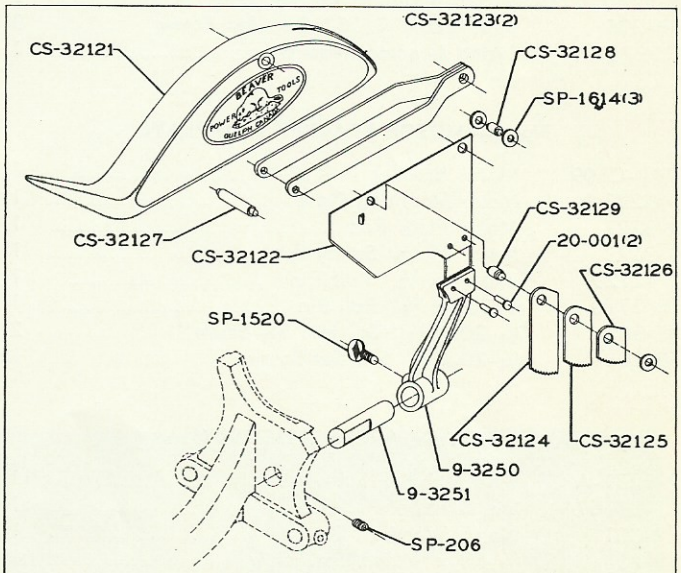

SPLITTER ATTACHMENT

FIG. 9

the tapered pivot screw to the required tension. Then tighten the headless set screw. Refer to Fig. 8.

Stop rods for the miter gage are available as an accessory and are used for cutting a number of pieces of a required length.

The tapped holes in the miter gage bar and in the top of the miter gage body are for the No. 865 Clamp attachment which is available as an accessory. This should be used when bevel mitering the ends of wide work, and in other operations where accurate miter or angle cuts are required. This attachment will eliminate creep toward or away from the saw blade and makes the operation safe, since the hands need not come near the blade. Installation or removal require only a few minutes time.

GUARD AND SPLITTER ATTACHMENT

The No. 9-32121-S Guard and Splitter Attachment is available as an accessory. It is quickly mounted by sliding onto the support rod, 9-3251, and tightening the thumb screw, SP-1520. Refer to Fig. 9.

The purpose of the splitter is to hold the saw kerf open so the stock cannot pinch the saw which will cause it to burn and bind. The guard protects the operator from the saw blade.

The splitter is fitted with three anti-kickback fingers which will effectively grab the stock and prevent the work from being thrown back to the operator.

Table 1. 3200 REPLACEMENT PARTS

IMPORTANT: Give both the Part Number and the Description of each item when ordering from this list; also the Serial Number of the machine on which the parts are to be used.

Part No.	Description	Number Required
	Fig. 1—BASE AND TABLE ASSEMBLY	
9-3201-A	Base Sub-Assembly	1
9-3205	Tilt Scale and Name Plate	1
SP-2252	No. 2 x 3/16 long drive screws	4
9-3207	Table	1
No. 34-661	Insert with screws	1
	SP-153 - No. 10-32 x 1/4" Set Screw, cup pt.	4
SP-649	5/16-18 x 1" Hex. Hd. Cap Screw	4
SP-1604	5/16" Steel Washer	4
	Fig. 2—QUARANT AND BRACKETS ASSEMBLY	
9-3208	Quadrant	1
TAB-C103	Quadrant Bracket	2
9-3209-A	Mandrel Bracket with sector assembled	1
9-3211	Mandrel Bracket Pivot Shaft	1
SP-5075	1/2" x 3/4" Roll Pin	1
SP-1288	1/4-20 Hex. Jam Nut	2
16-001	1/4-20 x 3/4" Sq. Hd. Set Screw	2
9-3210	Motor Mounting Bracket Rod	2
SP-206	5/16-18 x 5/16" Soc. Set Screw	3
FJ-315	Spring Loading Washer	1
	Fig. 3—MOTOR BRACKET AND PLATE	
TAB-C109	Motor Bracket	1
9-3221	Motor Mounting Plate	1
9-3222	Motor Plate Rod	1
9-3223	Motor Mount Safety Bar	1
SP-2729	3/16" x 1/2" Roll Pin	1
SP-2710	3/16" x 7/8" Roll Pin	1
SP-301	1/4-20 x 1/2" Sq. Hd. Set Screw	2
SP-208	1/4-20 x 1/4" Soc. Set Screw	1
	Fig. 5—ARBOR ASSEMBLY	
9-3231-A	Saw Mandrel Sub-Assembly	1
CS-32067A	Saw Mandrel Pulley	1
22-001	No. 5 Woodruff Key	1
SP-208	1/4-20 x 1/4 Soc. Set Screw	1
SP-5335	Saw Mandrel Bearing	1
LCS-C8	Saw Mandrel Loose Collar	1
SP-1226	5/8-18 Hex. Jam Nut	1
36-014	9" Combination Blade, 16 gage 5/8" Hole	1
	Fig. 6—RAISING AND TILTING MECHANISM	
9-3206	Cable Adjusting Nut	2
9-3212	Tilt and Elevation Shaft	1
9-3213	Tilt and Elevation Shaft Sleeve	1
9-3214	Wire Cable Drum	1
9-3215	Flexible Cable	1
9-3216	Cable Adjusting Stud	2
9-3217	Locking Hub	1
9-3218	Tilt or Lock Lever	2
9-3219	Pointer	1
9-3220-S	Handwheel Assembly	1
HSS-535	Special Fibre Washer 3/4 O.D., .25/64 I.D., 1/16" thick	2
TAB-129	Worm, 7/8" O.D., x 13/32" long, 3/8" bore, L.H.	
CS-1209	Locking Handknob, tapped 3/8-24 x 3/4" deep	1
JS-310821A	Lever Knob	1
SP-2711	1/8" x 5/8" Roll Pin	2
SP-206	5/16-18 x 5/16" Soc. Set Screw	1
SP-208	1/4 - 20 x 1/4 Soc. Set Screw	1
	Fig. 7—RIP FENCE AND GUIDE RAILS	
CS-32141B	Rip Fence Body	1
CS-32143A	Rip Fence Bar	1
BS-3367A	Rip Fence Front Slide	1
CS-321411A	Clamp Pivot Screw	1
CS-32142	Rip Fence Clamp	1
CS-32145A	Rip Fence Lever	1
9-3224	Guide Rail	2
48-013	1/4" x 1 3/8" Roll Pin	1
SP-2712	1/4" x 1 1/4" Roll Pin	1
SP-2702	1/4" x 5/8" Roll Pin	2
10-201	5/16 - 18 x 3/4" Soc. Hd. Cap Screw	2
16-407	5/16 - 18 x 3/8" Soc. Set Screw	2
10-804	No. 10 - 24 x 1" Fil. Hd. Mach. Screw	1
SP-5625	No. 10 - 24 x 1 1/4" Fil. Hd Mach. Screw	5
SP-1216	No. 10 - 24 Hex Nut	5
SP-1226	5/8 - 18 Hex Jam Nut	1

(Continued on next page)

Table 1 REPLACEMENT PARTS (Continued)

IMPORTANT: Give both the Part Number and the Description of each item when ordering from this list; also the Serial Number of the machine on which the parts are to be used.

Part No.	Description	Number Required
	Fig 8—MITER GAGE	
9-3226	Miter Gage Body	1
9-3227	Miter Gage Bar	1
NCS-166	Miter Gage Stud	1
9-3229	Pointer	1
9-3233	Stop	1
9-3232	Miter Gage Angle Scale	1
CS-2249	Handknob	1
NCS-168	Tapered Pivot Scr.	1
SP-1614	9/32 I.D. 5/8 O.D. .065 Th. St Washer	1
10-1613	8/32 x 1/2 Slotted Headless Nylok Set Scr.	3
SP-2717	3/32 x 1/2 Lg. Roll Pin	1
SP-5624	No. 6 - 32 x 3/16 Lg. Fil. Hd. Mach. Scr.	1
NCS-177	Set Screw	1
SP-2253	No. 0 x 3/16 Lg. Drive Screw	4
	ACCESSORIES	
No 4	3-Knife Moulding Cutter Head, 4" diam. 5/8 bore	1
No. 36-014	9" Combination Blade, 16 Gage, 5/8" Hole	1
No. 5225	2 1/4" Motor Pulley, with set screw (Specify 1/2, 5/8 or 3/4" Bore) for 60 Cycle, 3450 rpm Motor	1
No. 5450	4 1/2" Motor Pulley, with Set Screw (Specify 1/2, 5/8 or 3/4" Bore) for 60 Cycle, 1725 rpm Motor	1
No. 34-661	Standard Table Insert, with Levelling Screws, for Saw Blade	1
No. 34-662	Table Insert, with Levelling Screws, for Moulding Cutter Head	1
No. 34-663	Table Insert, with Levelling Screws, for Dado Head	1
CS-3236	Side Table Extension	1
9-32121-S	Blade Guard and Splitter, with Anti-Kickback Fingers	1
CS-3238	Long Guide Rails	2
MS-9-32-100	Steel Stand, with Screws, Nuts and Washers for Assembly	1
CS-32157-S	Trammel Assembly	1
No. 864	Miter Gage	1
No. 865	Clamp Attachment for Miter Gage	1
No. 873	Sliding Clamp with Clamp Screw	1
No. 49-362	Retractable Caster Set	1
	Fig. 9—SPLITTER ATTACHMENT	
9-3250	Splitter Brkt.	1
9-3251	Splitter Brkt. Rod	1
SP-1520	5/16 - 18 x 1/2 Lg. Thumb Scr. (Cad. Plated)	1
20-001	3/16 x 1/2 Lg., Rd. Hd., Alum. Rivet	2
CS32122	Splitter	1
CS32123	Guard Arm	1
CS32121	Guard	1
CS32124	3 3/4 Anti-Kickback	1
CS32125	2 11/16 Anti-Kickback	1
CS32126	1 3/4 Anti-Kickback	1
CS32127	Guard Hinge Pin	1
CS32128	Guard Arm and Spreader Pin	1
CS32129	Anti-Kickback Pin	1
SP-1614	9/32 I.D., 5/8 O.D., .065 Th. Flat Washer	3
SP-206	5/16 x 5/16 Soc. Set Screw	1

CONSULT YOUR BEAVER DEALER FOR PRICES OF REPLACEMENT PARTS, ACCESSORIES AND TOOLS
TO FACILITATE HANDLING WE SUGGGEST ORDERING ALL PARTS THROUGH YOUR BEAVER DEALER

The right is reserved to make changes in design or equipment at any time without incurring any obligation to install these on machines previously sold, and to discontinue models of machines, or accessories at any time without notice

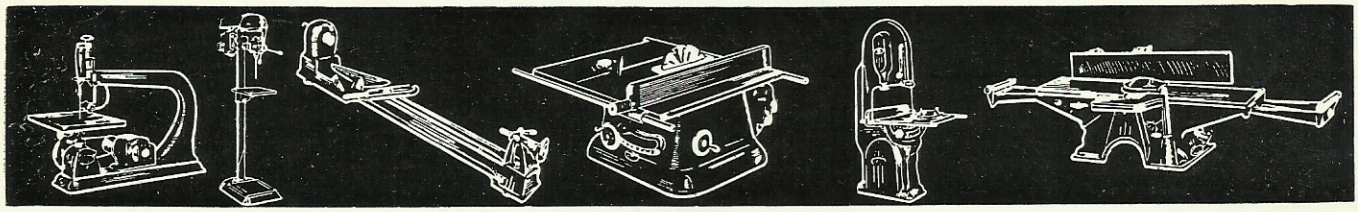

Beaver

Power Tools

PM - 1951

Dated: 12-23-58

Printed in Canada

2M-12-58-Leaman