Model 26
UNIVERSAL SPINDLE SHAPER

OPERATING INSTRUCTIONS

Price $2.50

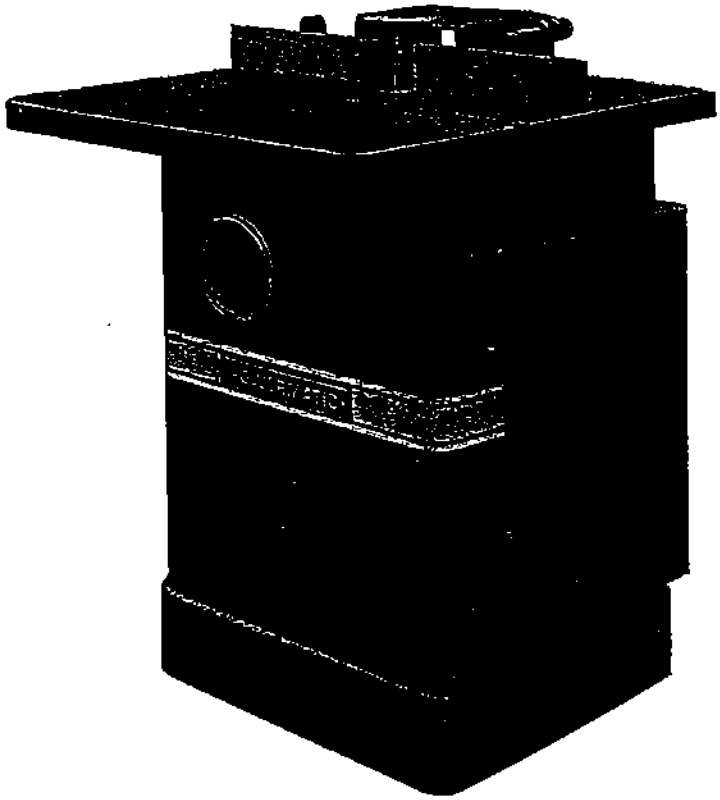

POWERMATIC®

Strength and performance right down the line.

POWERMATIC HOUDAILLE, INC.
McMinnville, Tennessee 37110 AC 615-473-5551

FOREWORD

SAFETY FIRST

This manual has been prepared for the owner and operators of a Powermatic Model 26 Spindle Shaper. It's purpose, aside from machine operation, is to promote safety through the use of accepted operating practice. Read the safety and operating instructions thoroughly before operating the machine.

In order to obtain maximum life and efficiency from your Powermatic Spindle Shaper, follow all the instructions in the Operating Instructions and Maintenance Manuals carefully.

The specifications put forth in this manual were in effect at the time of publication. However, owing to Powermatic's policy of continuous improvement, changes to these specifications may be made at any time without obligation on the part of Powermatic Houdaille, Inc.

WARRANTY

This machine and its component parts have been carefully inspected and performance tested at various stages of production and each finished machine is subjected to a final inspection before shipment. We agree that for a period of eighteen (18) months or 3000 hours of use, whichever occurs first from date of delivery from our authorized dealer, to repair or replace, at our option, any machine (or component part thereof) proving defective within the above period, F.O.B. our plant, providing such machine (or component part) is returned prepaid to our plant, or to a designated service center of the undersigned, for our examination. This warranty does not include repair or replacement required because of misuse, abuse, or because of normal wear and tear. Nor does it include electrical motors and electrical components which are warranted by their manufacturer and which should be taken to their local authorized repair station for service. Cost of removal, shipment and reinstallation are not covered hereby. Further, we cannot be responsible for the cost of repairs made or attempted outside of our factory or designated service center without our authorization. No claims will be honored if Serial No. plate has been removed. THIS WARRANTY IS MADE EXPRESSLY IN PLACE OF ALL OTHER WARRANTIES OR GUARANTEES, EXPRESS OR IMPLIED, WITH RESPECT TO FITNESS, MERCHANTABILITY, QUALITY OR OPERATIVENESS. THIS WARRANTY IS MADE ONLY TO THE ORIGINAL PURCHASER, AND BECOMES EFFECTIVE ONLY WHEN THE ACCOMPANYING CARD IS FULLY AND PROPERLY FILLED OUT AND RETURNED TO THE FACTORY WITHIN TEN (10) DAYS FROM DATE OF DELIVERY.

POWERMATIC HOUDAILLE, INC.
McMinnville, Tennessee 37110

SHAPER SAFETY INSTRUCTIONS

1. Read, Understand, and Follow the safety and operating instructions found in this manual. Know the limitations and hazards associated with this shaper. A safety decal is placed on each machine to serve as a reminder of basic safety practice.
2. Grounding of the Shaper: Make certain that the machine frame is electrically grounded and that a grounding lead is included in the incoming electrical service. In cases where a cord and plug are used, make certain that the grounding lug connects to a suitable ground. Follow the grounding procedure indicated by the National Electrical Code.
3. Eye Safety: Wear an approved safety shield, goggles or glasses to protect eyes when operating the shaper.
4. Personal Protection: Before operating the machine, remove tie, rings, watches, and other jewelry, and roll up sleeves above elbows. Remove all loose clothing and confine long hair. Protective type footwear should be worn and hearing protectors should be worn where noise exceeds the level of exposure allowed in section 1910.95 of the OSHA regulations. **Do Not Wear Gloves!**
5. Work Area: Keep the floor around the machine clean and free of scrap material, saw dust, oil or grease to minimize the danger of tripping or slipping. Powermatic recommends the use of anti-skid floor strips on the floor area where the operator normally stands. Provide ample unobstructed floor area around the machine for free flow of the stock through the machine on the infeed and outfeed side of the cutter. Mark off the machine area. Make certain that the work area is well lighted and that a proper exhaust system is used to minimize dust.
6. Guards: Keep the machine guards in place, make certain they are operable, and use them at all times on operations where they can be used. For operations where the guarding cannot be used, exercise extreme caution while performing the operation. After completion of the operation where a guard cannot be used, replace the guard immediately.
7. Don't Overreach: Maintain a balanced stance and keep your body under control at all times. Do not overreach or use excessive force to perform any operation.
8. Maintain Tools In Top Condition: Keep tools sharp and clean for safe and best performance. Dull tools can cause kickbacks and excessive chatter. Damaged tools or tools not properly secured in the cutterhead can be thrown out of the shaper causing severe or fatal injury. Check the condition and adjustment of the tools before making any cuts. Follow the instructions given on installation and adjustments in this manual.
9. Place Cutter Below Work Piece: Mount the cutter on the spindle so that the cutting operation is done on the bottom side of the stock to reduce the hazards of an exposed cutterhead whenever possible.
10. Feed Stock Opposite The Rotation Of The Cutters: Never back stock out of the cutter once a cut has been started. Instead, pull stock away and start the cut again. Feed stock opposite the direction of the cutter rotation.
11. Always Use The Safety Locking Washer With Its Integral Key: Never operate the shaper without the safety locking washer in place immediately under the spindle nut. The inside projection on the washer is designed to seat in the keyway on the spindle. Because the spindle is designed to revolve in either direction, this washer prevents the nut from coming loose when the spindle is reversed. NEVER substitute a standard washer in place of the safety locking washer.
12. Revolve The Spindle By Hand With Power Disengaged: After making a set-up on the shaper, always revolve the spindle one complete revolution by hand to insure proper clearance and nothing is in contact with the cutters before starting the machine. Be sure the direction of the cutterhead rotation is correct before starting a cut.
13. Remove all wrenches, extra spacers, cutters, etc., before testing the machine after completion of set-ups.
14. Hand Safety: Use a push stick whenever there is danger of the hands contacting the cutterhead. Avoid allowing the hands to pass in front of the cutterhead when shaping narrow stock. Do not clear chips and sawdust with the hands. Use a brush.
15. Hold-Downs: Use feather-boards, hold-downs and specially designed holding devices whenever possible to aid in the control of the stock as it is fed through the cutterhead

SHAPER SAFETY INSTRUCTIONS, cont'd

16. **Cutter Selection:** Use only cutters which are designed to be used on the machine.
17. **Safety Type Cutters:** Mount only safety type cutters on the machine spindle.
18. **Disconnect Power Source:** Whenever making adjustments, performing any maintenance or changing cutters, disconnect the machine from the power source to avoid the possibility of accidentally starting the machine.
19. Use a guide pin when performing pattern shaping and collar shaping operations whenever possible.
20. **Material Conditions:** Do not attempt to perform shaper operations on material with loose knots or nails or any foreign material on it's surface. Twisted, warped or in-wind stock should first be jointed on one surface before attempting to use it on a shaper.
21. **Short Stock:** Do not attempt to do short stock pieces (less than 12" in length) on a shaper without using special fixtures to keep your hands at a safe distance from the cutterhead. Where practical, the workpiece should be shaped in longer lengths and cut to size after shaping.
22. **Avoid Accidental Starting:** Make sure the motor switch is in the "off" position before connecting power to the shaper.
23. **Careless Acts:** Give the work you are doing your undivided attention. Looking around, carrying on a conversation, and "horseplay" are careless acts that can result in serious injury.
24. **Job Completion:** If the operator leaves the machine area for any reason, he should turn the shaper off and make certain the spindle has come to a complete stop before his departure. In addition, if the operation is complete, he should clean up the shaper and work area. NEVER clean the shaper with the power "on" and never use the hands to clear sawdust and debris— — use a brush.
25. **Replacement Parts:** Use only Powermatic or factory authorized replacement parts and accessories; otherwise, the shaper warranty and guarantee will be null and void.
26. **Misuse:** Do not use this Powermatic shaper for other than its intended use. If used for other purposes, Powermatic disclaims any real or implied warranty and holds itself harmless for any injury which may result from that use.
27. **CAUTION:** Do not equip this shaper with a motor of more than 2 horsepower at 3600 rpm. Do not exceed 10,000 rpm on the spindle. Use of a larger motor or higher speed voids the warranty and Powermatic holds itself harmless from any injury that may result from such excesses.
28. **Lag the Shaper to the Floor:** — through the holes provided in the base to avoid any tendency of the machine to tip or shift during use.

UNIVERSAL SPINDLE SHAPER SPECIFICATIONS

Table size with standard extension	29-7/8" X 28"	758.825mm X 601.2mm
Table extension	8-3/8" X 28"	212.725mm X 601.2mm
Table height from floor	34"	763.6mm
Spindle opening, diameter	5-1/2", 4", 2-3/4", & 1-3/4"	139,7, 101.6, 69.85, & 21.175mm
Spindles available:		
Interchangeable type, diameter	5/16", 1/2" & 3/4"	7.9375, 12.7 & 17mm
Stub spindle, pilot diameter	1/2"	12.7mm
Solid spindle type, diameter	1"	25.4mm
Spindle capacity under nut:		
1" Solid	4-7/8"	123.825mm
3/4" Interchangeable	3"	76.2mm
1/2" Interchangeable	2-1/4"	57.15mm
5/16" Interchangeable	1-1/8"	28.575mm
Spindle travel	3"	76.2mm
Spindle speed, rpm	7,000 & 10,000 rpm	7,000 & 10,000rpm
Table counterbore	7" dia. X 11/16" deep	177.8 dia. X 17.4625mm deep
Fence size each side	3-3/4" X 12-3/8"	94.25 X 314.325mm
Weight, domestic boxed with 2hp motor	450 lbs. approx.	204.12kg approx.

OPERATING INSTRUCTIONS

The spindle shaper is a versatile woodworking machine which can be used for a wide variety of operations such as:

- Rabbeting
- Grooving
- Beading
- Fluting
- Tenoning
- Panel raising
- Recessing
- Jointing
- Molding
- Special joint construction
- Routing
- Free-hand shaping
- Mitering

Each of these operations can create certain hazards which the operator should familiarize himself with. Using this knowledge, he can set up and perform each operation in the safest possible manner. Failure to recognize the hazards or carelessness in setting up and performing the operation can result in serious injury.

There are three basic rules for the successful operation of a shaper. These rules are that cutter rotation should always oppose the cut (Fig. 1) to avoid creating a self-feed action, cuts should be made with the grain whenever possible to minimize chipping out and guards, fixtures, templates, holddowns, push sticks, feather boards or other safety devices should be used whenever possible and always where it is necessary to perform an operation with safety.

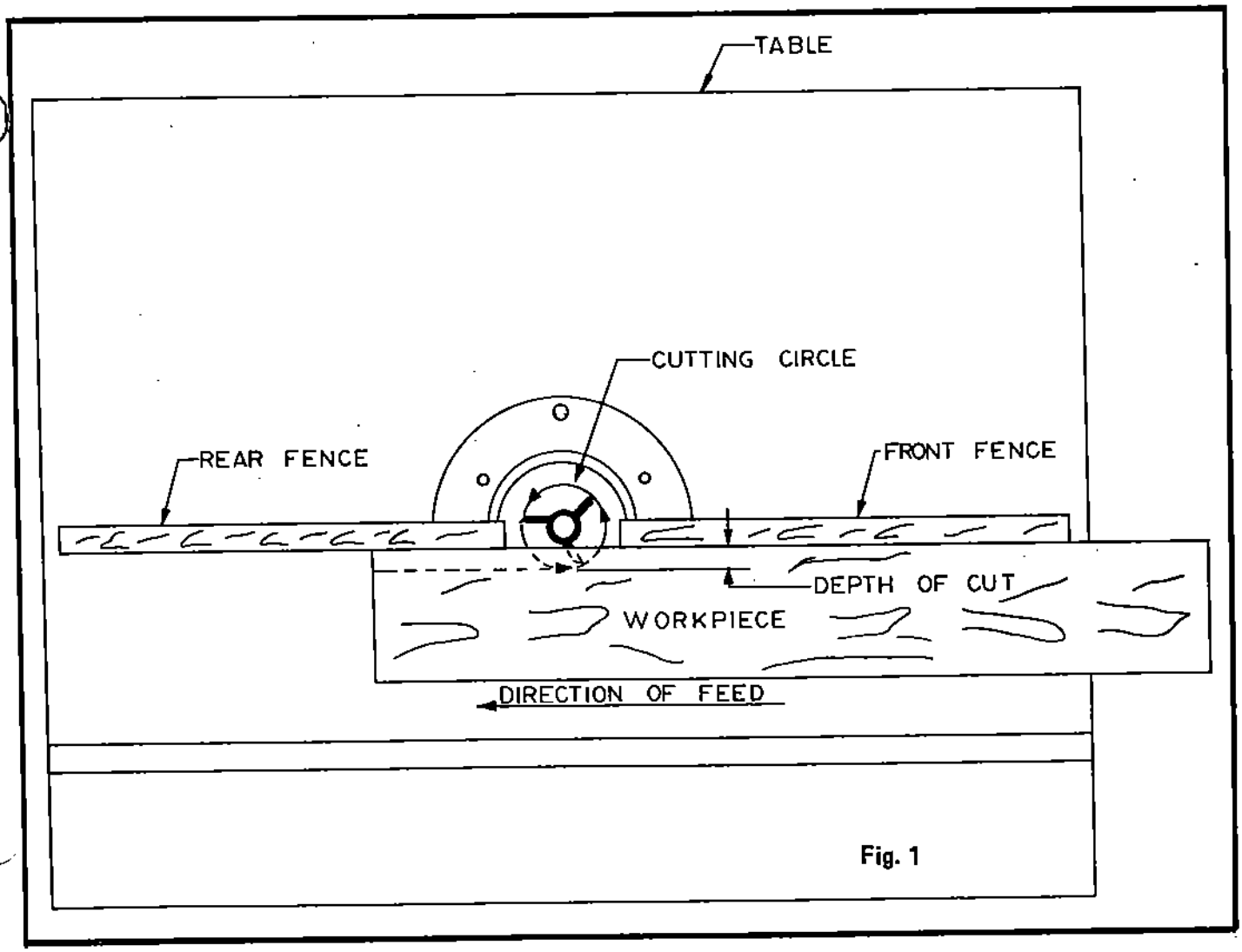

Fig. 1

Shaping is a Finishing or Semi-finishing Operation:

Your spindle shaper is equipped with a step cone pulley arrangement which provides spindle speeds of 7,000 and 10,000 rpm. DO NOT USE the 10,000 rpm speed for cutters larger than 4" diameter. Three types of spindles are available for your machine; a 1" diameter solid spindle type for large diameter cutters, an interchangeable type in 5/16", 1/2" or 3/4" diameters and a 1/2" diameter stub type for recessing work (Fig. 2).

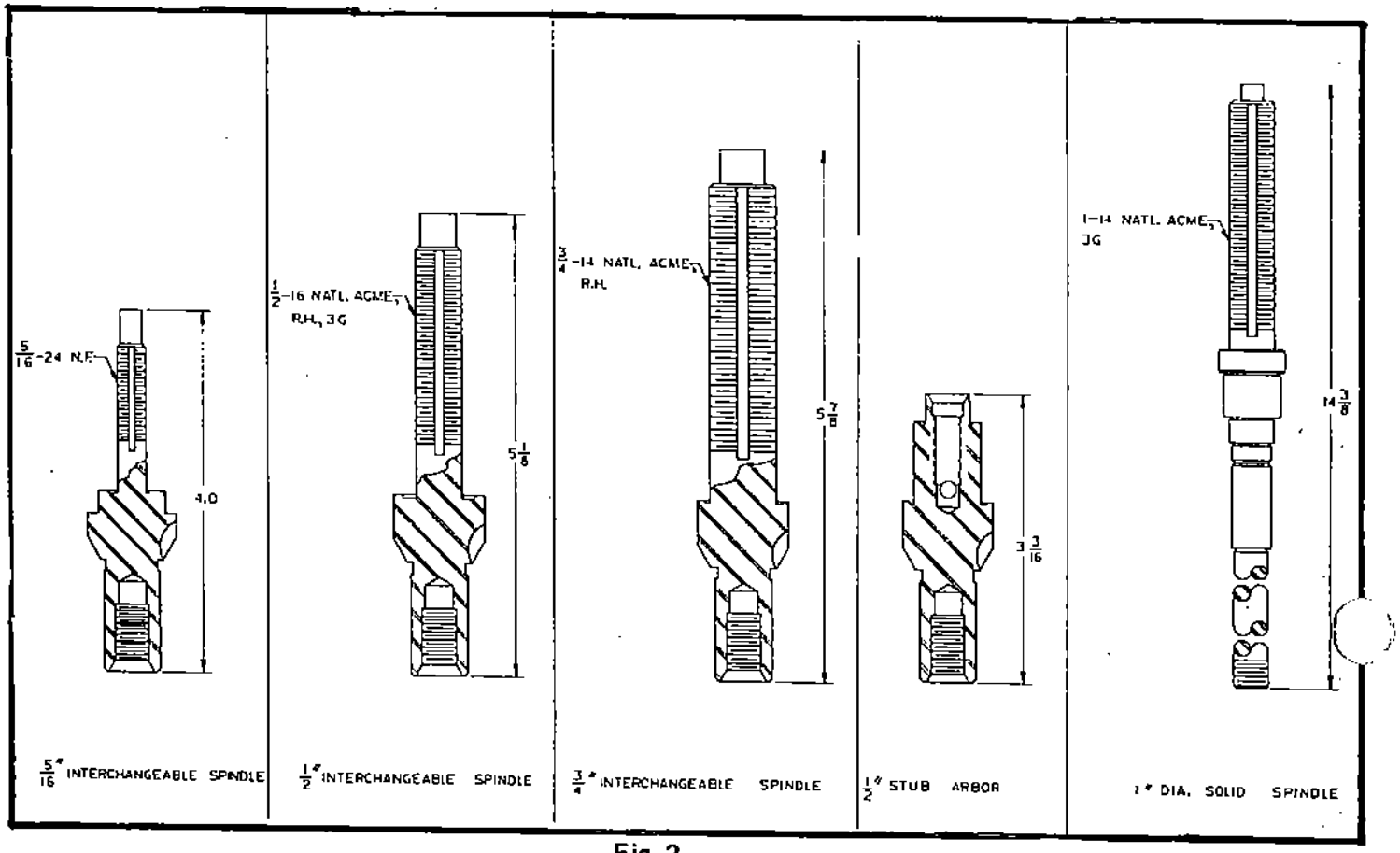

Fig. 2

Cutters are mounted directly on the threaded spindle with a variety of spacer collars. These are locked in place by an integrally keyed washer used just below the top locking nut and the locking nut itself. Powermatic recommends the use of either solid one-piece cutters or the safety type adjustable blade style. Where possible, the cutter should be mounted on the spindle close to the quill bearing to minimize overhang.

Whenever practical, the larger section of the cutter or the cutter itself should be closest to the shaper table such that the workpiece itself serves the function of hooding or containing the cutter. An example of this would be in doing raised panel type work (Fig. 3).

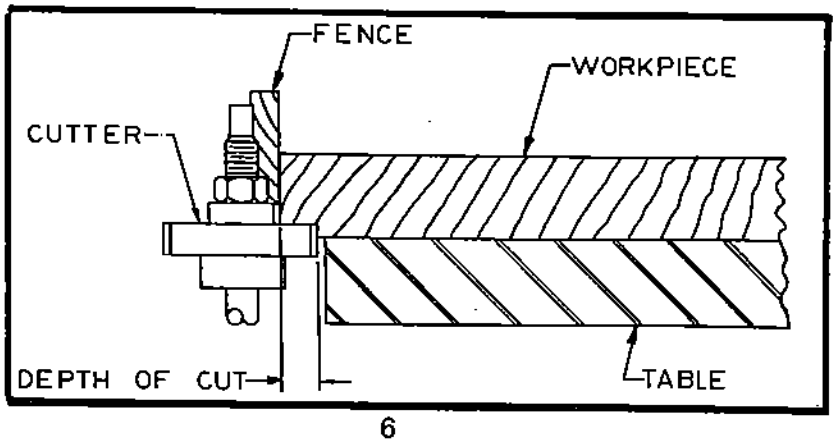

Fig. 3

Cutter Height:

Cutter height can be regulated by the handwheel on the front of the shaper and by what spacers are used on the spindle. Final adjustment should be made using the handwheel. A binder is provided to lock the cutterhead slide in position after final adjustment (Fig. 4).

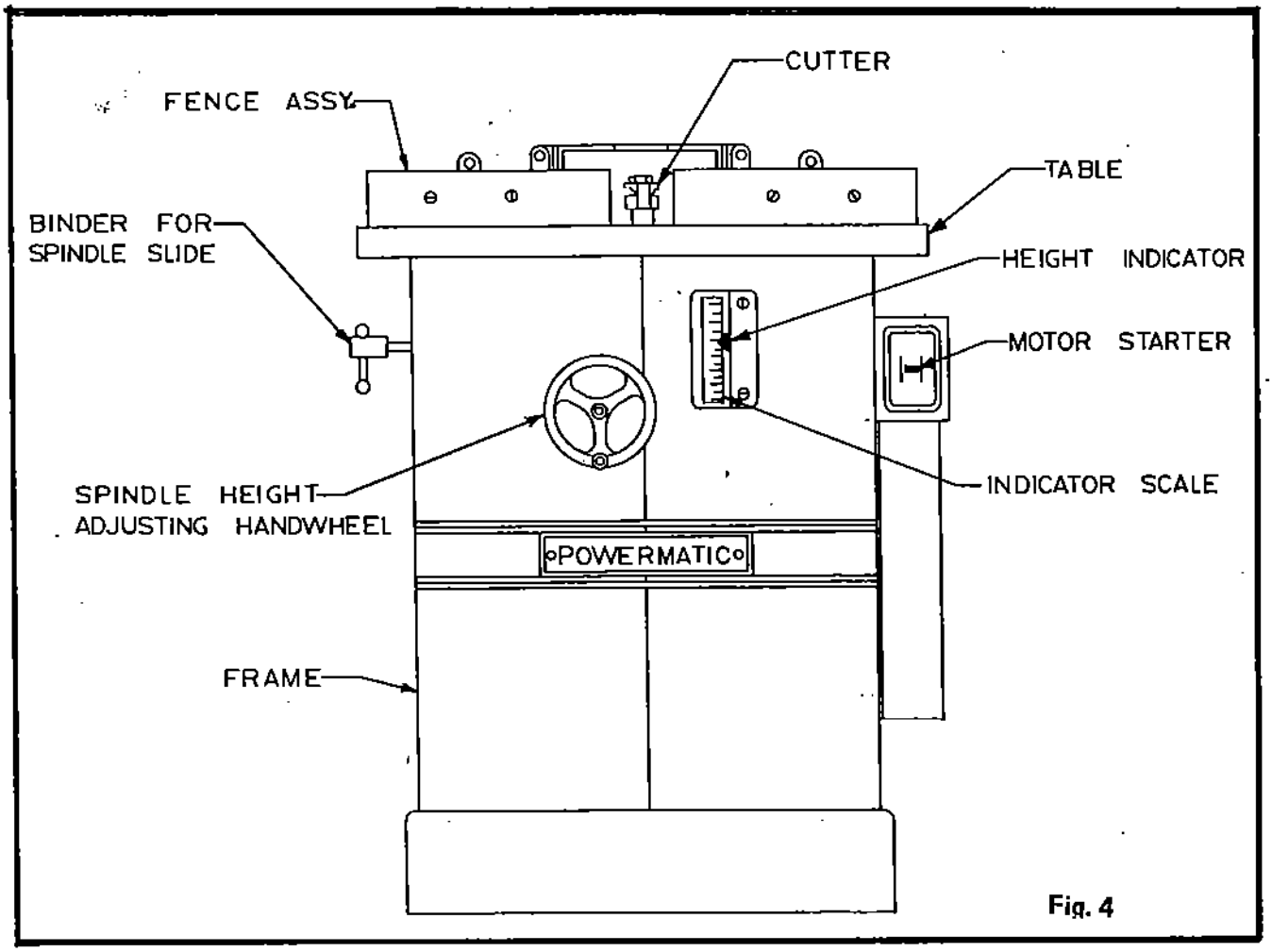

Fig. 4

Method of Operation:

There are four common methods of controlling stock as it is fed across the shaper. These are:

1. Using a guide or fence.
2. Using a form or fixture.
3. Using a template or pattern.
4. Using collars.

Each of these techniques are widely used and will be employed depending on the work to be done.

Shaping With a Guide:

Your Powermatic shaper comes equipped with the most commonly used guide called a fence (Fig. 5). It is mounted to the table with two screws for easy removing when doing work where the fence cannot be used. Each side of the two-piece fence can be adjusted independently both front to back and side-wise. It is faced with replaceable hardwood to minimize marring the workpiece. (See the section of the maintenance manual on resurfacing the fence.)

Wood is used as a facing material so as to protect the stock being faced and to avoid metal to metal contact with the revolving cutterhead. The screws used to mount the facing board should be countersunk 1/2 the board thickness to allow for resurfacing.

Types of cuts made with a guide are rabetting, jointing, glue edge joint cutting, dadoing and many decorative molding type cuts.

For rabetting and dadoing and other straight type cuts where the cut does not remove the entire thickness of the board, both halves of the fence should be in line.

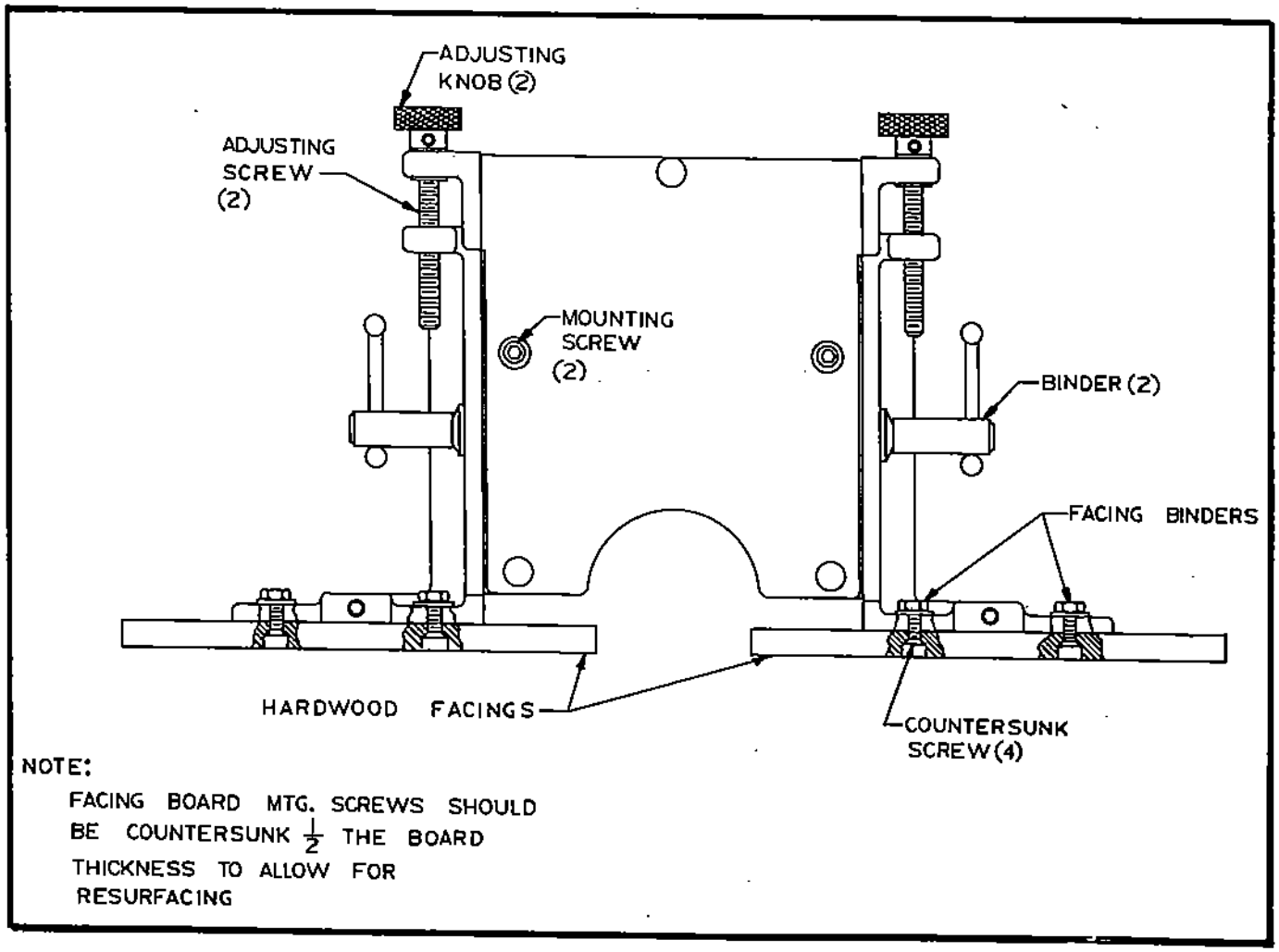

Fig. 5

Straight Cuts:

To set up for a straight cut after the cutter has been installed and its height above the table adjusted by measurement:

1. Roughly position the right hand fence to produce the depth of the cut desired. Adjust it sidewise to minimize the gap between the fence and cutter. Final adjustment of the depth of cut can be made by cutting on a waste piece just past the centerline of the cutter and measuring the depth. The adjusting screws have thirteen threads per inch so that one revolution of the handle will move the fence halves .077"

2. Using a straight edge, line the left hand fence to the right hand side. Adjust the fence sidewise to be close to the cutter to minimize the opening.

CAUTION:

Whenever practical, the uncut portion of the thickness should be on top to minimize the exposure of the cutter during the cut and provide added safety. Use hold-downs whenever possible (Fig. 6) for increased safety. These hold-downs can be either feather boards (Fig. 7) or of the commercial spring type.

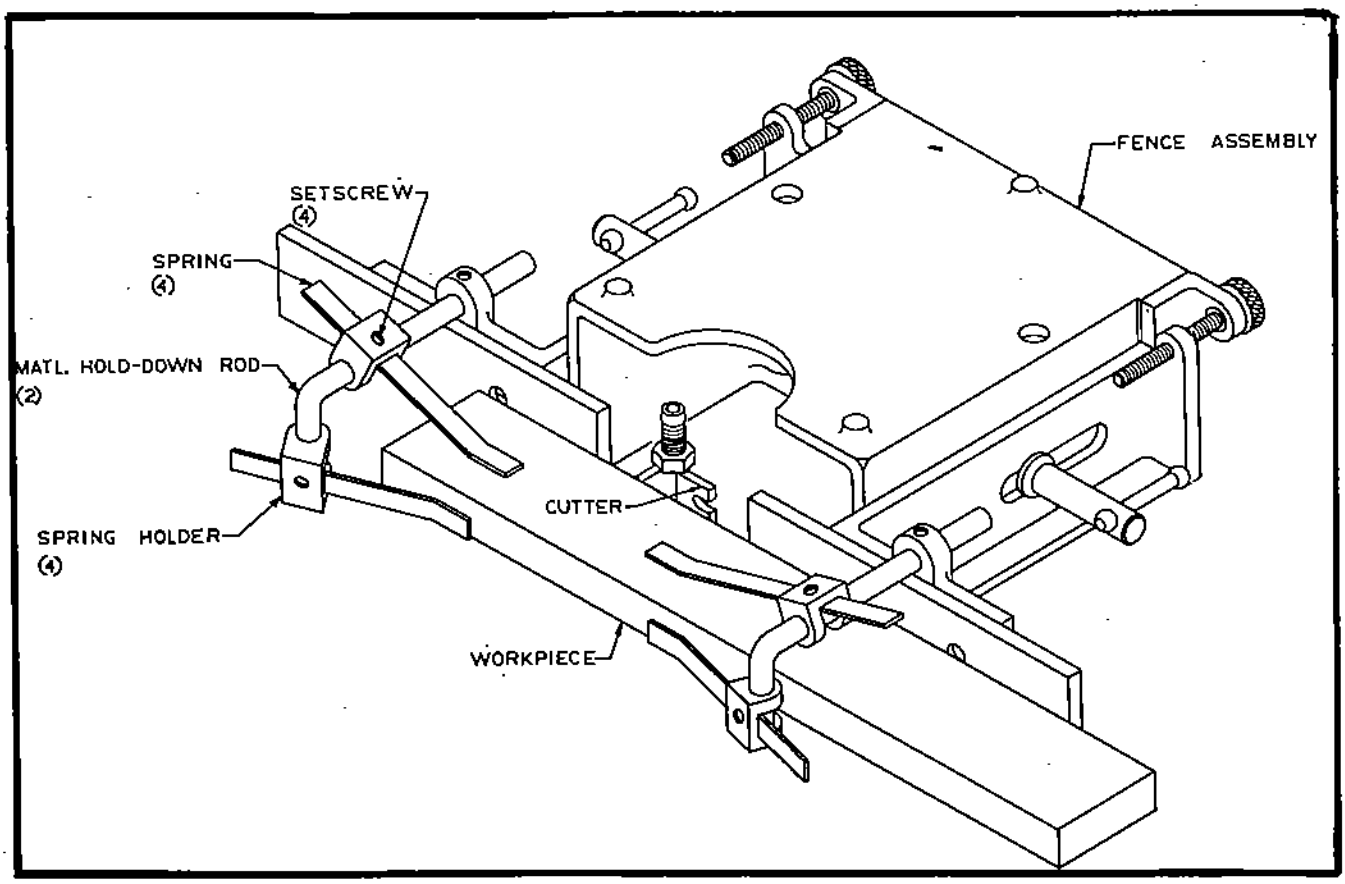

Fig. 6

CAUTION, cont'd

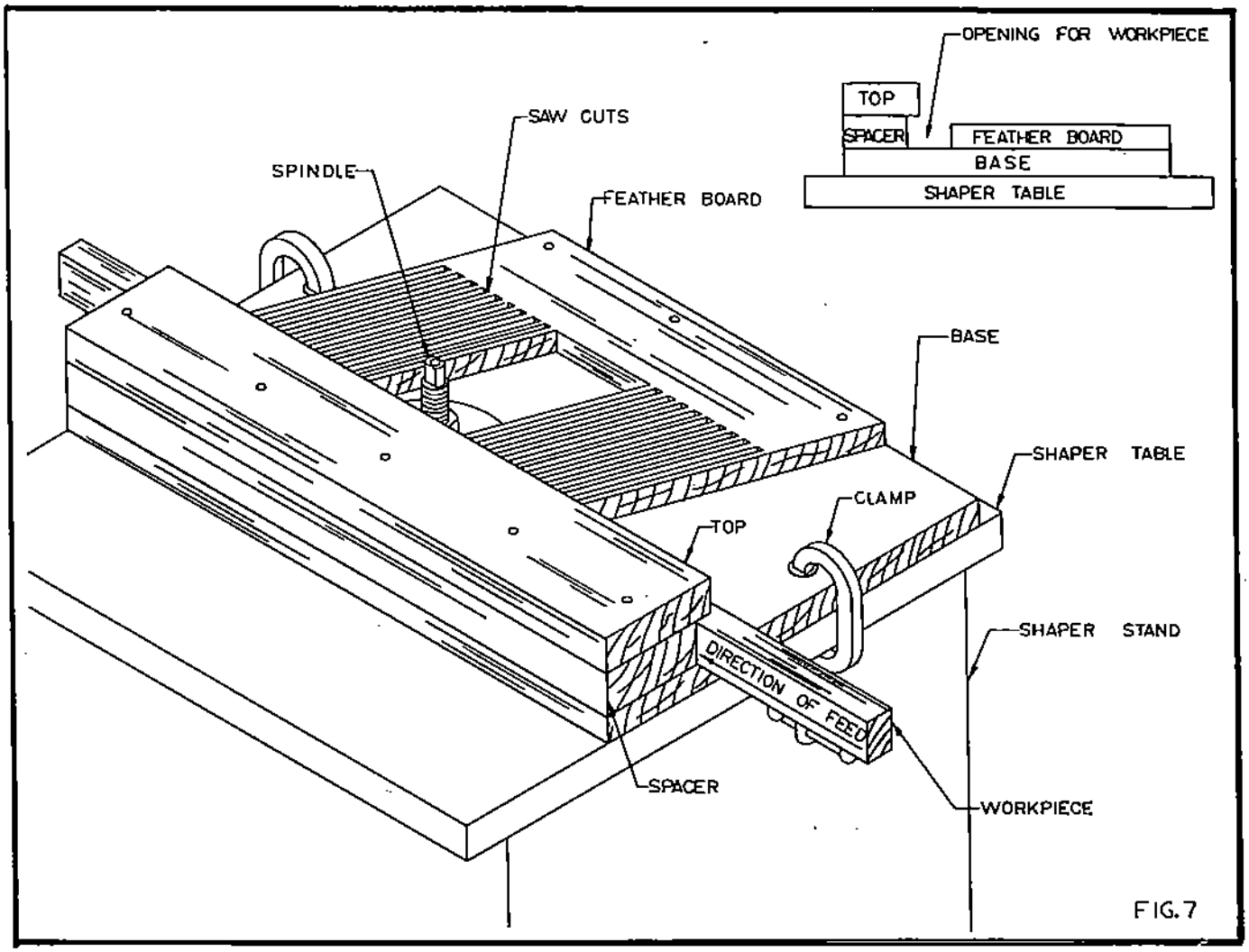

FIG. 7

When making cuts on the full thickness, adjust the left hand fence to be in line with the minimum depth portion of the cut so that the workpiece will be supported on both sides of the cutter (Fig. 8)

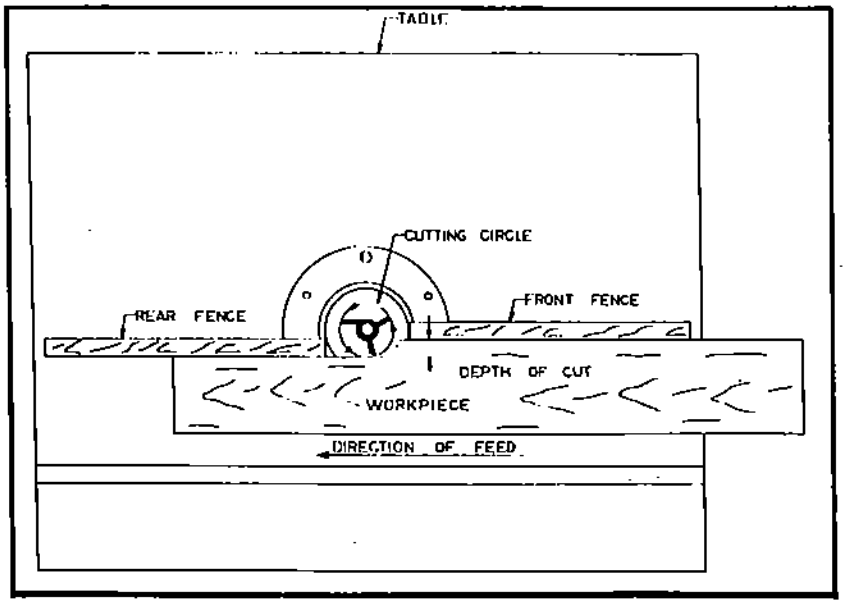

Fig.8

Taper Cuts:

Taper can be made using the standard fence similar to the method used on a jointer (Fig.9) by offsetting the fences for the amount of taper desired, or with a layout line on the stock which can be paralleled to the front fence. Start the cut by holding the stock against the front fence and swinging it into contact with the fence just past the cutterhead. As the cut is started transfer pressure to hold the board against the fence to the rear fence and continue feeding the board through. Readjust the fences for parallel cut and the final depth of cut and complete the tapering operation.

Caution: Do not use the standard fence for short work (12" or less in length on the side to be cut). Use a miter gauge or special fixture to avoid loosing control of the workpiece.

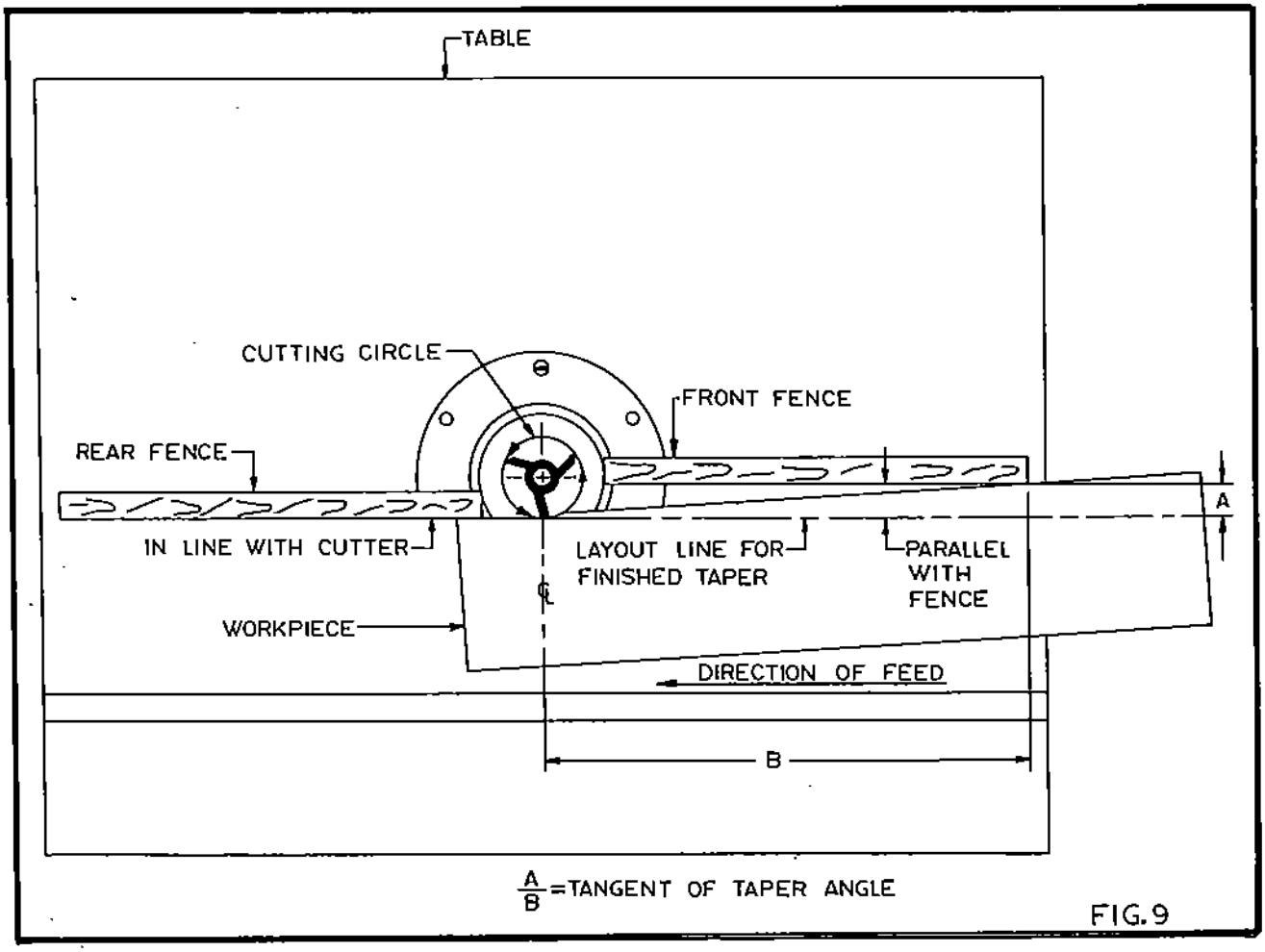

FIG. 9

Shaping With Forms or Fixtures:

CAUTION: Always use the ring guard when performing cuts where the standard fence has to be removed and a special fence is not used.

Using this method, special jigs or devices such as a miter gauge are used to feed the part past the cutterhead. An example of this type would be the fluting fixture shown in Fig. 10. Another example is that of a tenoning fixture shown in Fig. 11. A miter gauge equipped with a hold-down can be used for shaping the ends of narrow stock and where using the standard fence would be extremely dangerous. It can also be used for cutting an angle on the end of the workpiece by simply setting the gauge at the desired angle, clamping the stock down and using the gauge to feed the workpiece past the cutterhead (Fig. 12).

Shaping With Forms or Fixtures, cont'd

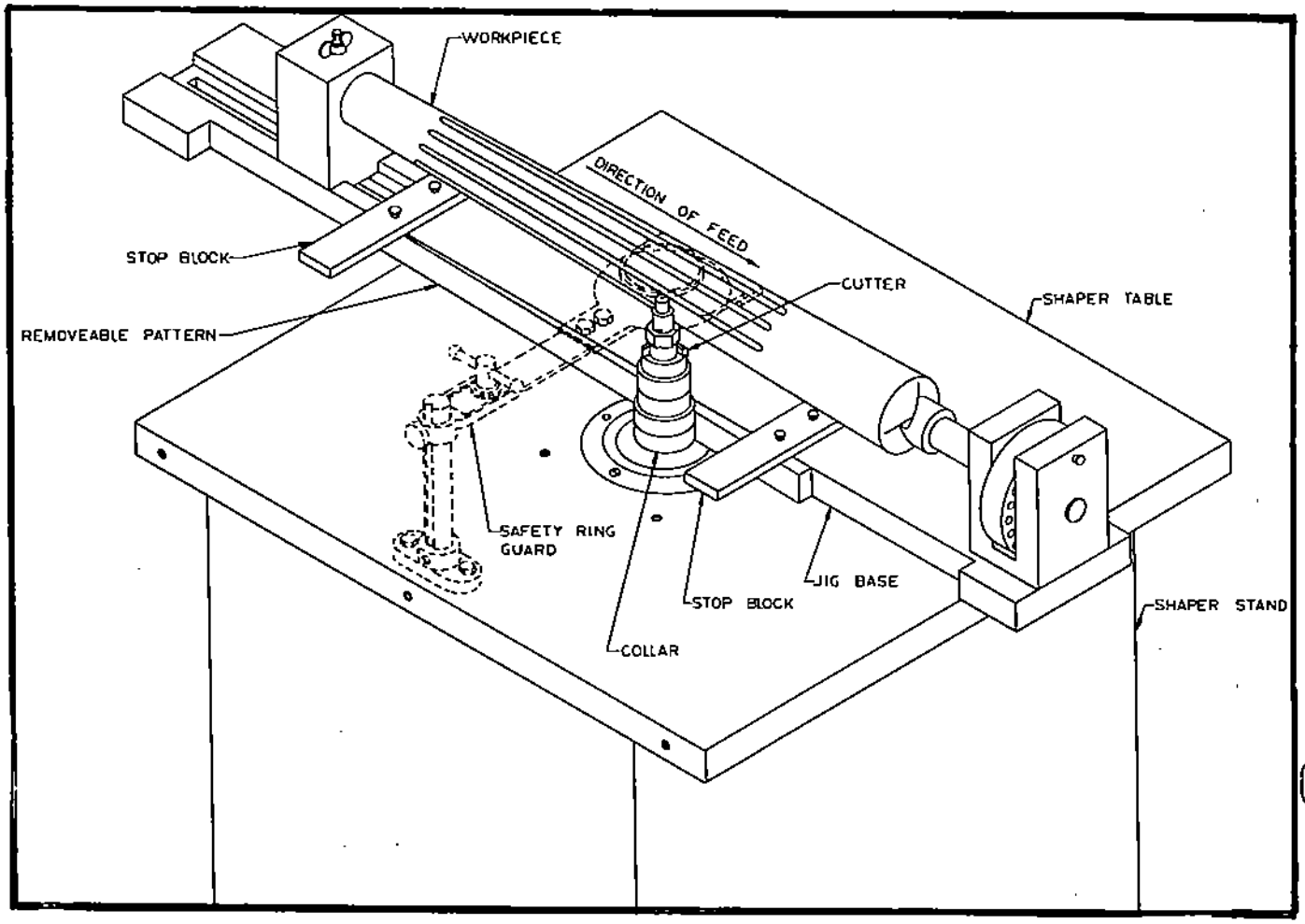

Fig. 10

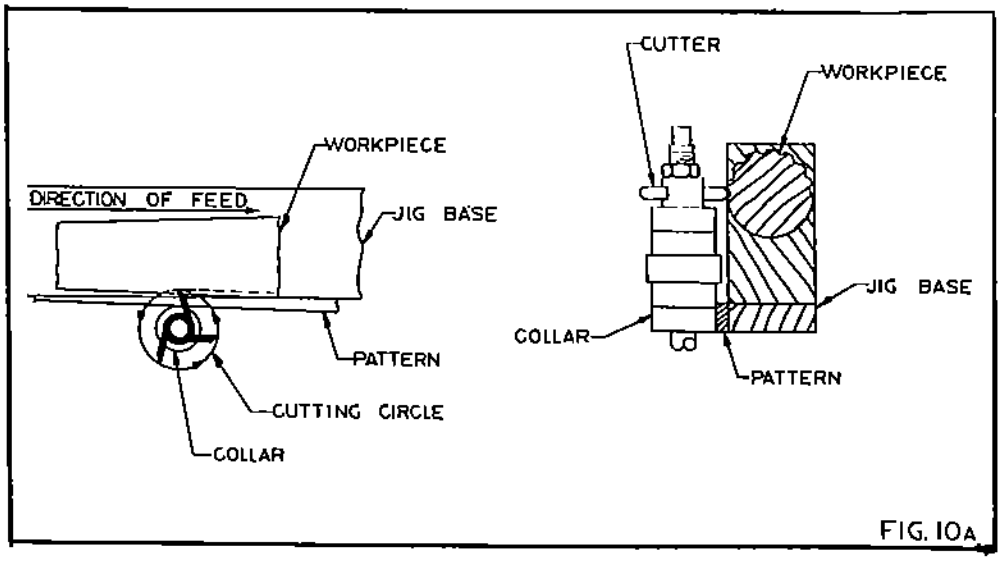

FIG. 10A

Shaping With Forms and Fixtures, cont'd

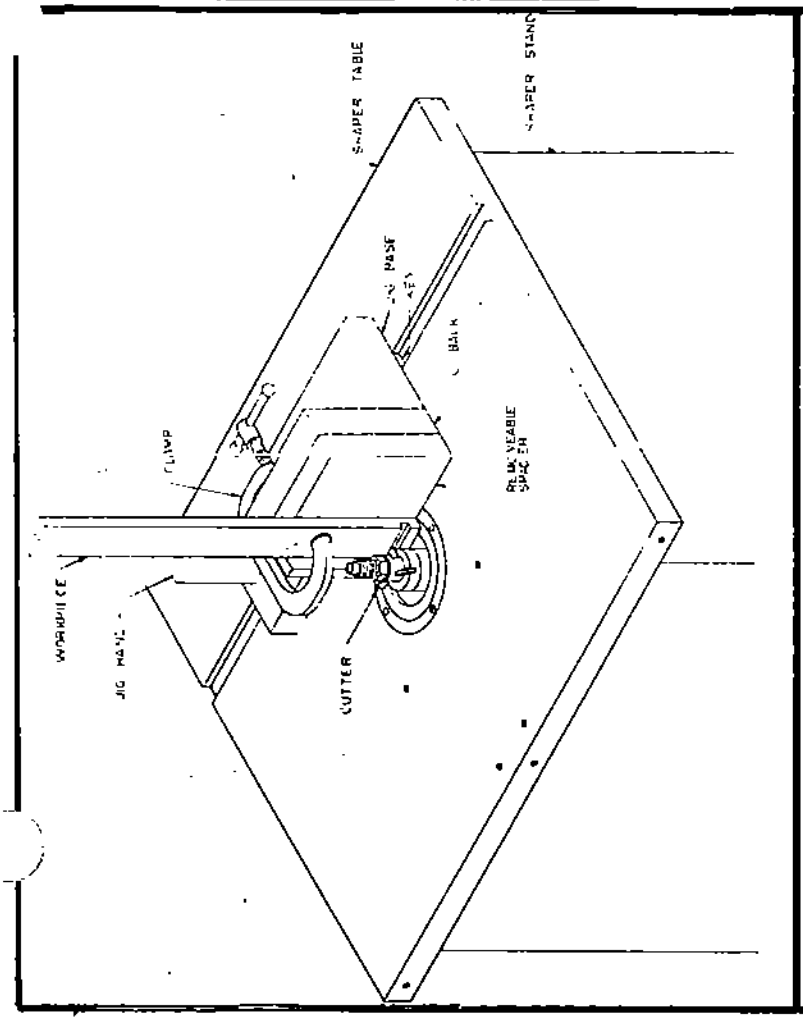

Fig. 11

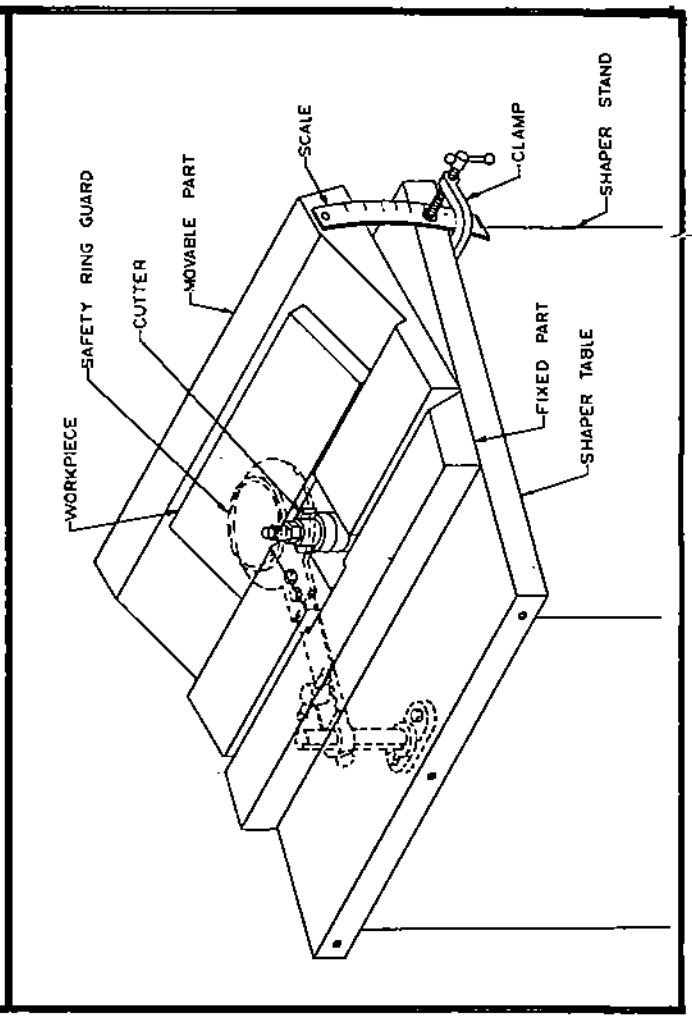

Fig. 12

Shaping With Patterns or Templates:

CAUTION: Always use the ring guard when performing cuts where the standard fence has to be removed and a special fence is not used.

Shaping with a pattern is a good example of how production operations can be performed on your Powermatic shaper. The pattern serves as a guide which contacts the collar or collars on the spindle to transfer the shape or contour of the pattern to the workpiece. It is recommended that a guide pin be used to help support the form as it is fed into the cutter (Fig. 13).

A number of methods can be used to locate the workpiece to the template or pattern, such as brads, screws and clamps. Sometimes screw holes can be located in such a position that the holes can later be used to attach decorative hardware or other ornamentation.

CAUTION: No matter what attaching method is used, be sure it is solid enough to hold it from coming loose under cut.

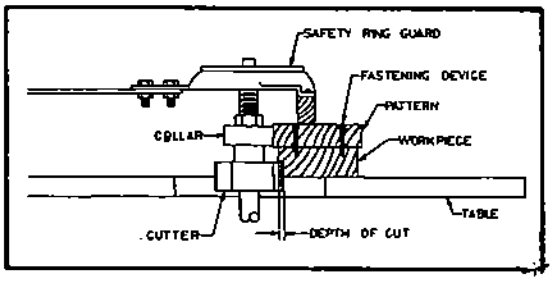

Fig. 13a

Shaping With Patterns or Templates, cont'd

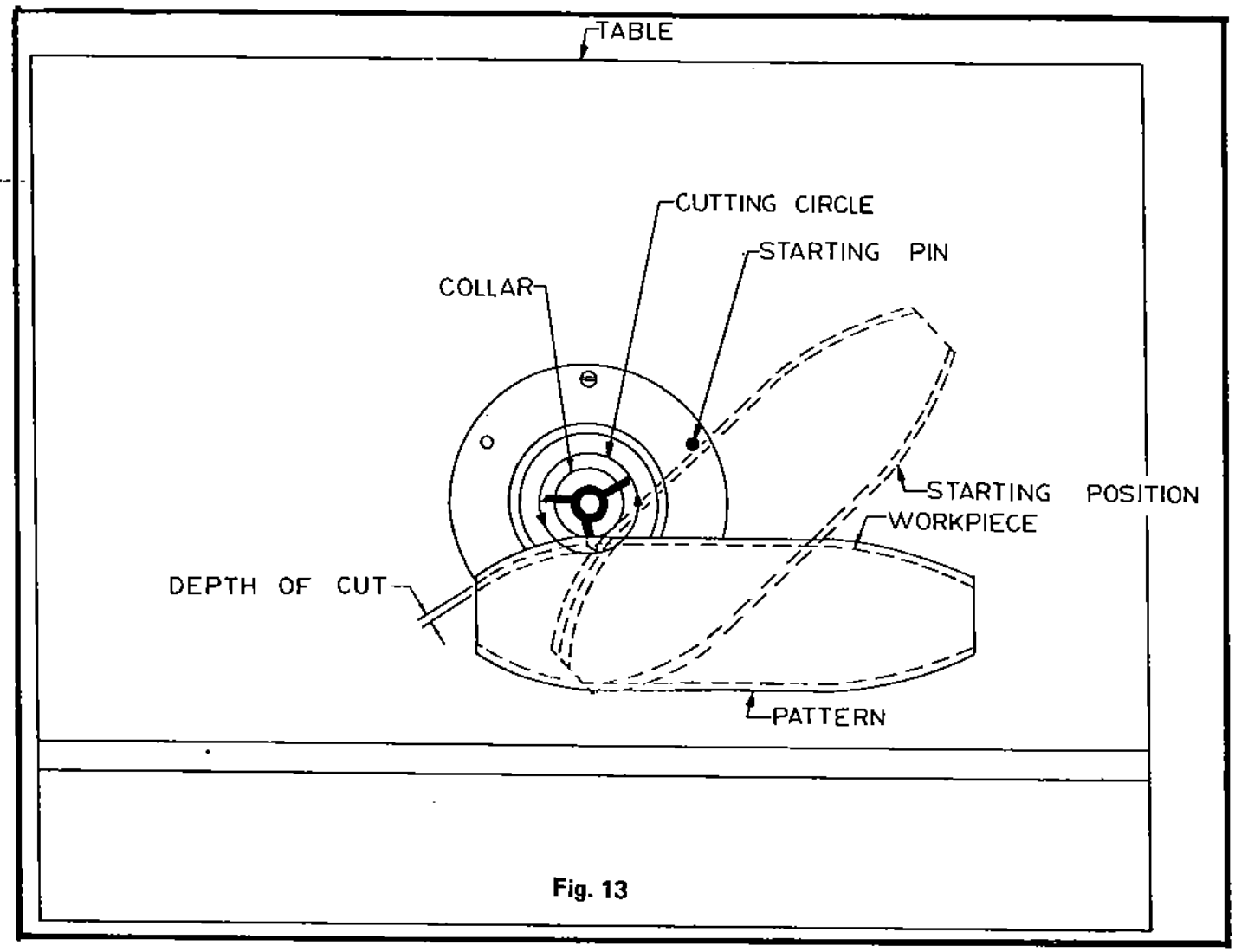

Fig. 13

Shaping Using Collars:

CAUTION: Free-hand shaping with collars is the most hazardous operation to be performed on a shaper. Use extreme caution and do not perform the operation without a ring guard or similar safety device over the cutterhead. Wherever practical, the uncut portion of the workpiece should be on top so that the workpiece tends to cover part of the cutterhead

Collars (Fig. 14) are used both when shaping with a pattern or fixture and when shaping free-hand to control the depth of cut. Whenever collars are used, the following basic rules apply:

1. Be sure the collars are clean and free of any nicks or scratches. A good oven cleaner will remove the gum or pitch build-up.
2. The edge of the stock to be shaped must be smooth and free of imperfection. Any imperfection on the surface that rides against the collar will be duplicated in the cut.
3. The uncut stock that rides against the collars must have sufficient bearing surface.
4. The work must be heavy in proportion to the cut to be made. Do not shape short pieces or weak and thin-bodied work against collars; use patterns where the workpiece can be clamped.
5. Always use a starting pin so that the start of a cut can be controlled and in combination with the collar it will give two points of support in feeding the workpiece.

When using solid collars, there is a tendency for the collar to burn the surface it rides against which may require additional finishing where the burn marks are objectionable.

Shaping Using Collars, cont'd

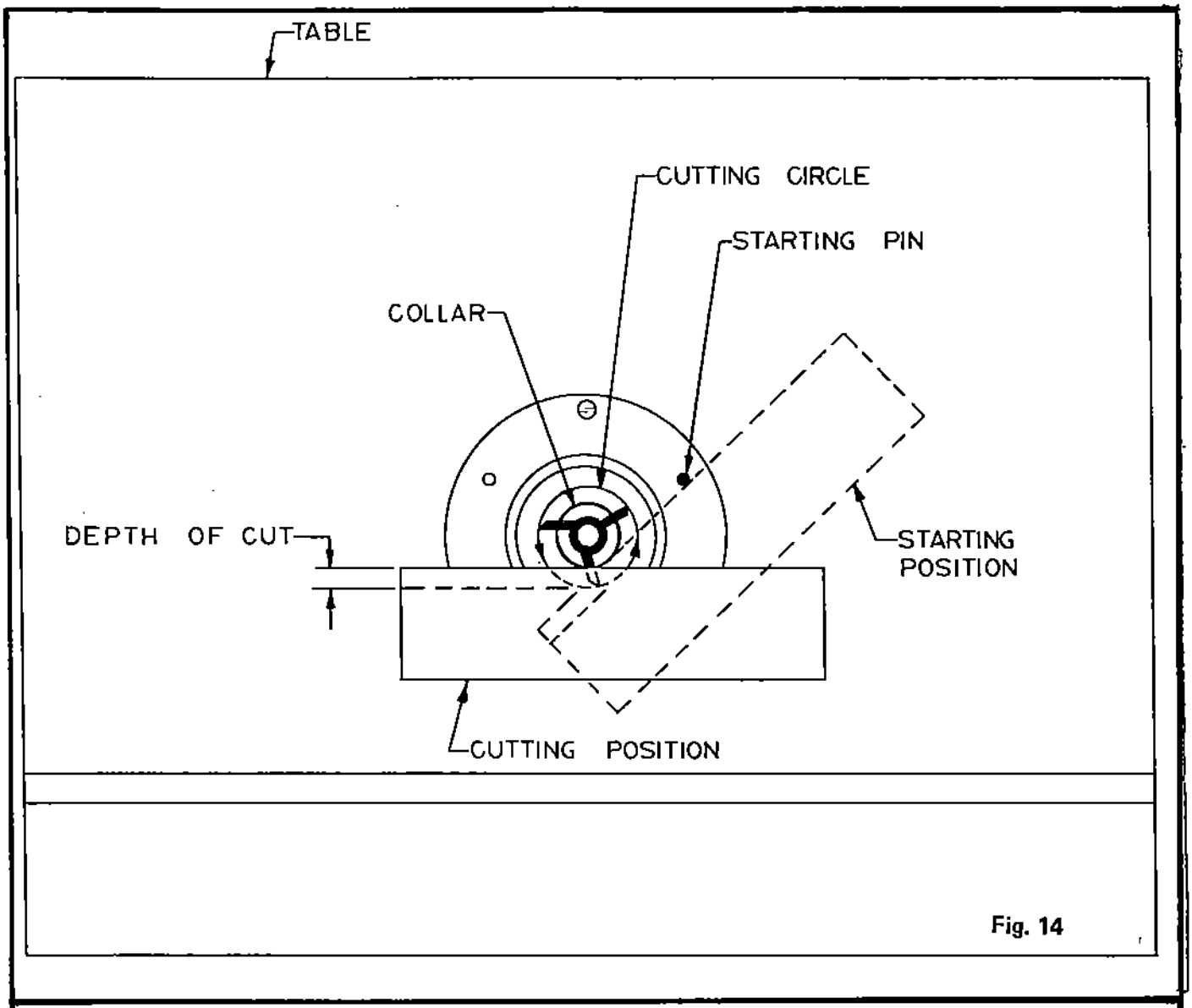

Fig. 14

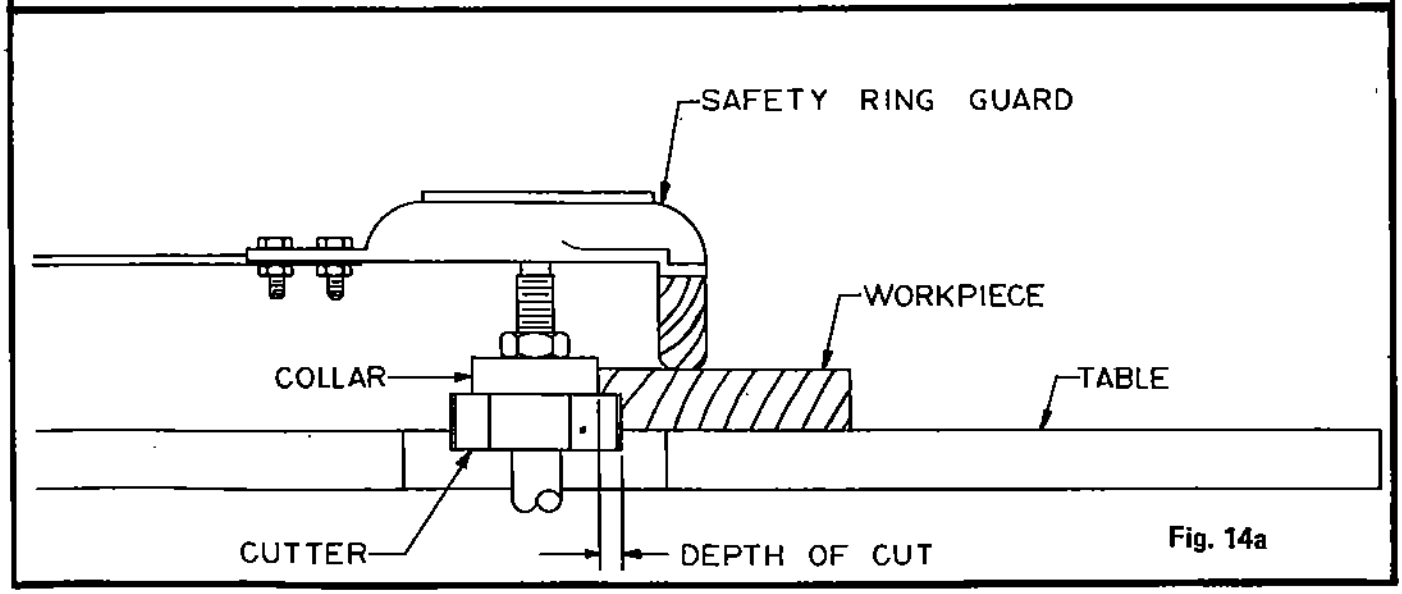

Fig. 14a

Model 26
UNIVERSAL
SPINDLE SHAPER

MAINTENANCE INSTRUCTIONS AND PARTS LIST

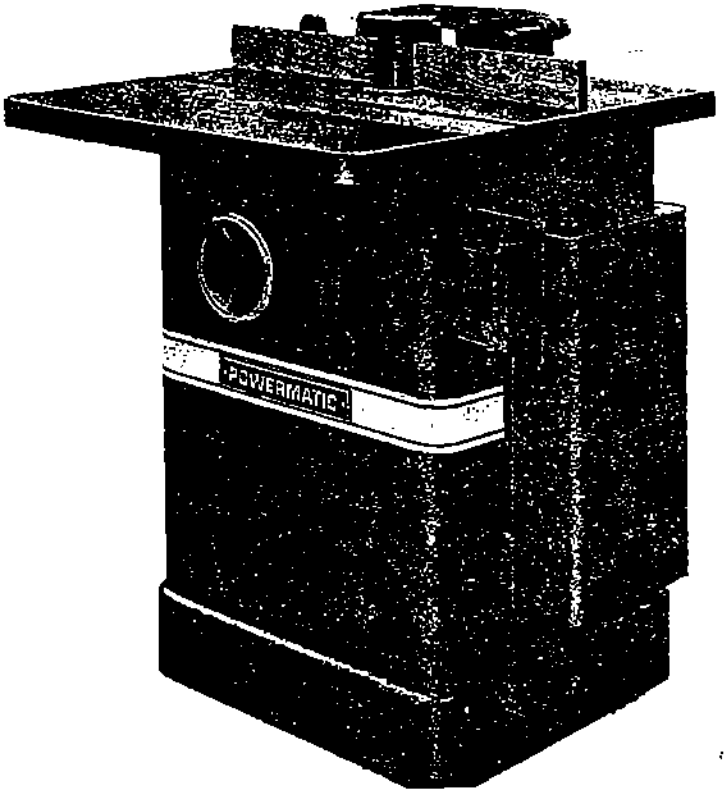

Better By Design®

POWERMATIC®

POWERMATIC® HOUDAILLE
McMinnville, Tennessee 37110
AC 615-473-55

FOREWORD

SAFETY FIRST

This manual has been prepared for the owner and those respobsible for the maintenance of a Powermatic Model 26 Spindle Shaper. Its purpose, aside from machine operation, is to promote safety through the use of accepted operating practice. Read the safety and operating instructions thoroughly before operating the machine.

In order to obtain maximum life and effeciency from your Powermatic Spindle Shaper, follow all the instructions in the Operating Instructions and Maintenance Manuals carefully.

The specifications put forth in this manual were in effect at the time of publication. However, owing to Powermatic's policy of continuous improvement, changes to these specifications may be made at any time without obligation on the part of Powermatic Houdaille, Inc.

WARRANTY

This machine and its component parts have been carefully inspected at various stages of production and each finished machine is subjected to a final inspection before shipment. We agree that for a period of eighteen (18) months from date of delivery from our authorized dealer to replace, at our option, any machine (or component part thereof) proving defective within the above period, F.O.B. our plant providing such machine (or component part) is returned prepaid to our plant, or a designated service center of the undersigned, for our examination. **THIS WARRANTY DOES NOT INCLUDE REPAIR OR REPLACEMENT REQUIRED BECAUSE OF MISUSE, ABUSE, OR BECAUSE OF NORMAL WEAR AND TEAR; OR ELECTRICAL MOTORS WHICH ARE WARRANTEED BY THEIR MANUFACTURER AND WHICH SHOULD BE TAKEN TO THEIR LOCAL AUTHORIZED REPAIR STATION FOR SERVICE. FURTHER, WE CANNOT BE RESONSIBLE FOR THE COST OF REPAIRS MADE OR ATTEMPTED OUTSIDE OF OUR FACTORY OR DESIGNATED SERVICE CENTER WITHOUT OUR AUTHORIZATION. NO CLAIMS FOR DEFECTS WILL BE HONORED IF SERIAL NUMBER PLATE HAS BEEN REMOVED. THIS WARRANTY IS MADE EXPRESSLY IN PLACE OF ALL OTHER WARRANTIES OR GUARANTEES, EXPRESS OR IMPLIED, WITH RESPECT TO FITNESS, MERCHANTABILITY, QUALITY OR OPERATIVENESS. THIS WARRANTY BECOMES EFFECTIVE ONLY WHEN THE ACCOMPANYING CARD IS FULLY AND PROPERLY FILLED OUT AND RETURNED TO THE FACTORY WITHIN TEN (10) DAYS FROM DATE OF DELIVERY.**

POWERMATIC HOUDAILLE
McMinnville, Tennessee 37110

SHAPER SAFETY INSTRUCTIONS

1. READ, UNDERSTAND, AND FOLLOW the safety and maintenance instructions found in this manual. Know the limitations and hazards associated with this Shaper. A safety decal is placed on each machine to serve as a reminder of basic safety practice.

2. GROUNDING OF THE SHAPER: Make certain that the machine frame is electrically grounded and that a grounding lead is included in the incoming electrical service. In cases where a cord and plug are used, make certain that the grounding lug connects to a suitable ground. Follow the grounding procedure indicated by the National Electrical Code.

3. EYE SAFETY: Wear an approved safety shield, goggles or glasses to protect eyes when operating the Shaper.

4. PERSONAL PROTECTION: Before operating the machine, remove tie, rings, watches, and other jewelry, and roll up sleeves above elbows. Remove all loose clothing and confine long hair. Protective type footwear should be worn and hearing protectors should be worn where noise exceeds the level of exposure allowed in section 1910.95 of the OSHA regulations. Do Not Wear Gloves!

5. WORK AREA: Keep the floor around the machine clean and free of scrap material, saw dust, oil or grease to minimize the danger of tripping or slipping. Powermatic recommends the use of anti-skid floor strips on the floor area where the operator normally stands. Provide ample unobstructed floor area around the machine for free flow of the stock through the machine on the infeed and outfeed side of the cutter. Mark off the machine area. Make certain that the work area is well lighted and that a proper exhaust system is used to minimize dust.

6. GUARDS: Keep the machine guards in place, make certain they are operable, and use them at all times on operations where they can be used. For operations where the guarding cannot be used, exercise extreme caution while perfroming the operation. After completion of the operation where a guard cannot be used, replace the guard immediately.

7. DON'T OVERREACH: Maintain a balanced stance and keep your body under control at all times. Do not overreach or use excessive force to perform any operation.

8. MAINTAIN TOOLS IN TOP CONDITION: Keep tools sharp and clean for safe and best performance. Dull tools can cause kickbacks and excessive chatter. Damaged tools or tools not properly secured in the cutterhead can be thrown out of the Shaper causing severe or fatal injury. Check the condition and adjustment of the tools before making any cuts. Follow the instructions given on installation and adjustments in this manual.

9. PLACE CUTTER BELOW WORK PIECE: Mount the cutter on the spindle so that the cutting operation is done on the bottom side of the stock to reduce the hazards of an exposed cutterhead whenever possible.

10. FEED STOCK OPPOSITE THE ROTATION OF THE CUTTERS: Never back stock out of the cutter once a cut has been started. Instead, pull stock away and start the cut again. Feed stock opposite the direction of the cutter rotation.

11. ALWAYS USE THE SAFETY LOCKING WASHER WITH ITS INTEGRAL KEY: Never operate the Shaper without the safety locking washer in place immediately under the spindle nut. The inside projection on the washer is designed to seat in the keyway on the spindle. Because the spindle is designed to revolve in either direction, this washer prevents the nut from coming loose when the spindle is reversed. NEVER substitute a standard washer in place of the safety locking washer.

12. REVOLVE THE SPINDLE BY HAND WITH POWER DISENGAGED: After making a set-up on the Shaper, always revolve the spindle one complete revolution by hand to insure proper clearance and nothing is in contact with the cutters before starting the machine. Be sure the direction of the cutterhead rotation is correct before starting a cut.

13. REMOVE all wrenches, extra spacers, cutters, etc., before testing the machine after completion of set-ups.

14. HAND SAFETY: Use a push stick whenever there is danger of the hands contacting the cutterhead. Avoid allowing the hands to pass in front of the cutterhead when shaping narrow stock. Do not clear chips and sawdust with the hands. Use a brush.

15. HOLD-DOWNS: Use feather-boards, hold-downs and specially designed devices whenever possible to aid in the control of the stock as it is fed through the cutterhead.

SHAPER SAFETY INSTRUCTIONS, cont'd

16. CUTTER SELECTION: Use only cutters which are designed to be used on the machine.

17. SAFETY TYPE CUTTERS: Mount only safety type cutters on the machine spindle.

18. DISCONNECT POWER SOURCE: Whenever making adjustments, performing any maintenance or changing cutters, disconnect the machine from the power source to avoid the possibility of accidentally starting the machine.

19. USE A GUIDE PIN when performing pattern shaping and collar shaping operations whenever possible.

20. MATERIAL CONDITIONS: Do not attempt to perform shaper operations on material with loose knots or nails or any foreign material on its surface. Twisted, warped or in-wind stock should first be jointed on one surface before attempting to use it on a shaper.

21. SHORT STOCK: Do not attempt to do short stock pieces (less than 12" in length) on a shaper without using special fixtures to keep your hands at a safe distance from the cutterhead. Where practical, the workpiece should be shaped in longer lengths and cut to size after shaping.

22. AVOID ACCIDENTAL STARTING: Make sure the motor switch is in the "off" position before connecting power to the Shaper.

23. CARELESS ACTS: Give the work you are doing your undivided attention. Looking around, carrying on a conversation, and "horseplay" are careless acts that can result in serious injury.

24. JOB COMPLETION: If the operator leaves the machine for any reason, he should turn the Shaper off and make certain the spindle has come to a complete stop before his departure. In addition, if the operation is complete, he should clean up the Shaper and work area. NEVER clean the Shaper with the power "on" and never use the hands to clear sawdust and debris – use a brush.

25. REPLACEMENT PARTS: Use only Powermatic or factory authorized replacement parts and accessories; otherwise, the Shaper warranty and guarantee will be null and void.

26. MISUSE: Do not use this Powermatic Shaper for other than its intended use. If used for other purposes, Powermatic disclaims any real or implied warranty and hold itself harmless for any injury which may result from that use.

27. CAUTION: Do not equip this Shaper with a motor of more than 2 horsepower at 3600 RPM. Do not exceed 10,000 RPM on the spindle. Use of a larger motor or higher speed voids the warranty and Powermatic holds itself harmless from any injury that may result from such excesses.

28. LAG THE SHAPER TO THE FLOOR: – through holes provided in the base to avoid any tendency of the machine to tip or shift during use.

UNIVERSAL SPINDLE SHAPER SPECIFICATIONS

Table size with standard extensions	29-7/8" x 28"	758.825mm x 601.2mm
Table extension	8-3/8" x 28"	212.725mm x 601.2mm
Table height from floor	34"	673,6mm
Spindle opening, diameter	5-1/2", 4", 2-3/4" & 1-3/4"	139.7mm, 101.6mm, 69.85mm & 21.175mm
Spindles available		
Interchangeable type, diameter	5/16", 1/2" & 3/4"	7.9375mm, 12.7 & 17mm
Stub spindle, pilot diameter	1/2"	12.7mm
Solid spindle type, diameter	1"	25.4mm
Spindle capacity under nut:		
1" solid	4-7/8"	123.825mm
3/4" Interchangeable	3"	76.2mm
1/2" Interchangeable	2-1/4"	57.15mm
5/16" Interchangeable	1-1/8"	76.2mm
Spindle travel	3"	76.2mm
Spindle speed, RPM	7,000 & 10,000	7,000 & 10,000 RPM
Table counterbore	7" dia. x 11/16" deep	177.8 dia. x 17.4625mm deep
Fence size each side	3-3/4" x 12-3/8"	94.25 x 314.325mm
Weight, domestic boxed with 2hp motor	450 lbs. app.	204.12kg app.

SPINDLE AND QUILL REPLACEMENT:

To remove the interchangeable spindle, select the proper rectangular hole in the standard shaper wrench. Place it over the flats on the top of the interchangeable spindle. Place 5/8" hex wrench over the draw bar nut and turn it counter-clockwise, Fig.2 holding the top of the spindle stationary. Remove the spindle and replace with the size of your choice.

To remove the whole spindle assembly, remove the top screw holding the motor base. Slip the belt off the spindle sheave. Loosen the split casting locking screw holding the quill assembly and remove it out the bottom (Fig.3). CAUTION: Do not remove the lower screw in the motor base. It will result in the entire motor and slide falling from its mount. To reinstall, reverse the above procedure.

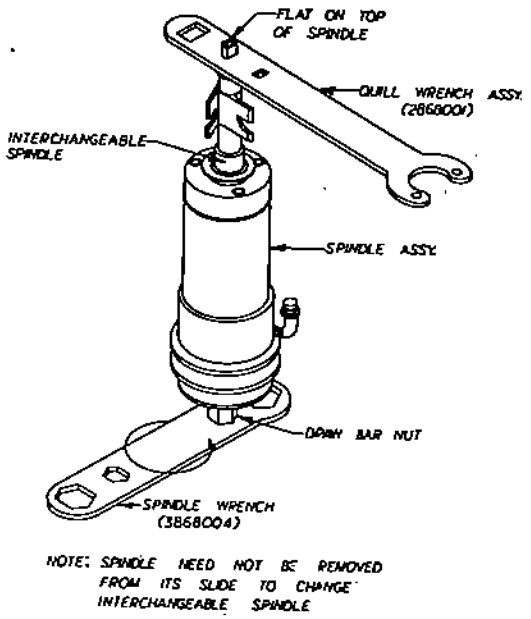

Fig. 2

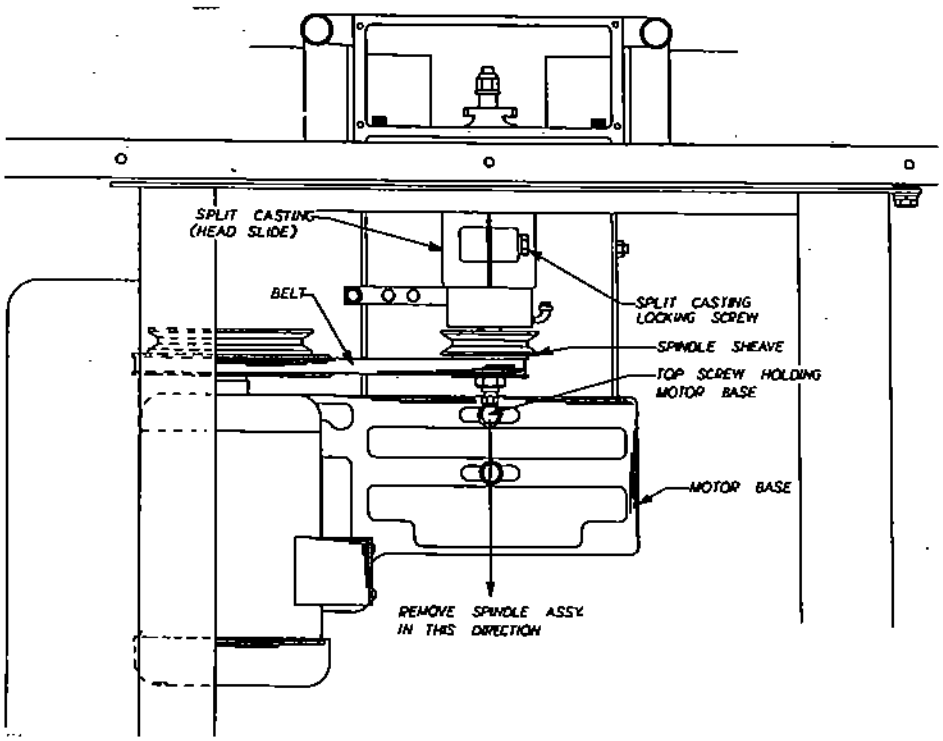

Fig. 3

RECEIVING:

Uncrate the machine and check for shipping damage. Report any damage to the carrier and your distributor immediately. If accessories were ordered with the machine, these will be in separate containers and should be checked for completeness and damage. Notify the carrier and your distributor immediately if any items are missing or damaged.

INSTALLATION:

Mount the machine on a solid foundation, preferably a reinforced concrete floor, and lag the machine to the floor through the holes in the tabs on the inside of the base (see page 9, Fig. 7 for hole location and size). The machine area should be clean, dry, well ventilated, and well lighted. Since shapers can create noise problems, the site selection should be one which minimizes reverberant sound from walls, ceilings, and other equipment. Electrical service should be installed so that it is protected from damage and exposure and does not create a tripping hazard to personnel. Follow the recommendations of the National Electrical code for grounding.

EXHAUST SYSTEM:

When an exhaust system is used, be sure it is of sufficient size to provide an exhaust volumne of from 440 to 1400 cubic feet per minute, depending upon the amount of material to be removed per minute. If an exhaust system is not used, the user is cautioned against the health hazard and the limitations in OSHA regulations for employee or student exposure to dust particles.

Powermatic recommends the use of an exhaust system with a wood shaper.

INSPECTION:

Before putting power to the machine, check that all screws are tight, that all mechanical functions work freely, that the cutterhead turns freely and that spindle oil has been put in the cutterhead (note the cutterhead is shipped dry). To fill the spindle requires one fluid ounce or 30 milliliters of oil. If over-filled, the spindle will lose oil until it reaches the one ounce level.

Periodic and regular inspections are required to insure that the machine is in proper adjustment, that all screws are tight, that belts are in good condition, that dust has not accumulated in the electrical enclosure, that all mechanical functions work freely, and that there are no loose or worn electrical connections.

Correct all problems before operating the machine.

BEFORE OPERATING:

Check the motor and switch wiring diagrams for proper voltage connections before applying power to the machine (see pages 22 & 23 for wiring diagrams).

Turn the main drive motor on momentarily to check for proper rotation. The spindle should rotate counterclockwise when looking down on the spindle. Correct as required. Run the machine for a short period of time to insure that the moving parts are working properly and that there is no excessive vibration. If a problem developes, correct before turning the shaper over for general use.

Be sure to read, understand and follow the recommendations in the operating instructions when operating the shaper.

SQUARING THE FENCE:

From time to time due to wear and replacing renewable wood facing on the fence, the wood surface will have to be squared with the mounting surface and parallel to each other. To true the faces, carefully align the wooden fences with a straight edge and lock firmly in position. If fences are not parallel with each other and square with the table, remove the entire fence assembly from the shaper. Countersink if necessary. Resurface the wood facing fences on a Jointer as shown in Fig. 1. Make sure the fence is square with the table. The bottom of the fence assembly must be held firmly against the Jointer fence if the cut is to be square with the shaper table. This procedure can be used many times to renew the surface before the wood fences must be replaced.

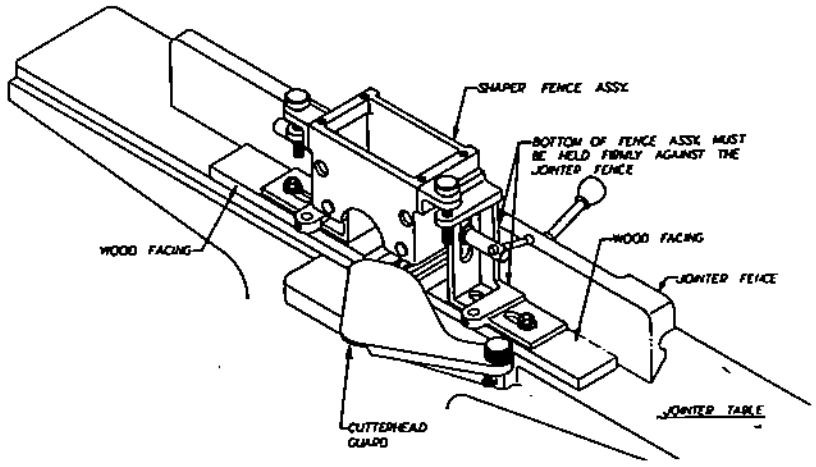

Fig. 1

QUILL BEARING REPLACEMENT:

With the quill assembly removed as indicated in the above procedure, unscrew the oil filler cap "A" Fig.4, and empty oil from the reservoir "B". Hold the sheave "C" from rotation and remove nut "D" and lock washer "E". Remove sheave "C" and its key. Remove the three socket head cap screws holding the reservoir to the quill "F". Be carefull not to damage the gasket "G". Remove the three socket head cap screws from the top cap. Be careful not to damage its gasket. Hold the quill in a vise and-tap the bottom end of the spindle with a soft hammer or block of wood. The lower bearing will remain in the housing. The slinger "H" and spacer "J" will come free and the upper bearing will remain on the spindle.

Tap the lower bearing out of the quill. Back out the set screw in the collar "I" behind the top bearing and set the top cap on vise jaws or two blocks of wood. Tap the end of the spindle "K" downward to remove the front bearing "L" from the spindle. In replacing the bearings, reverse the above procedure. CAUTION: The upper cap "M" must be on the front end of the spindle before the bearing is pressed on.

Before reassembly of parts, be sure to thoroughly clean the entire assembly. Be sure the holes through the quill are properly lined up with the caps so that oil will flow up through one hole in the quill and excess overflow will flow back down through the other hole.

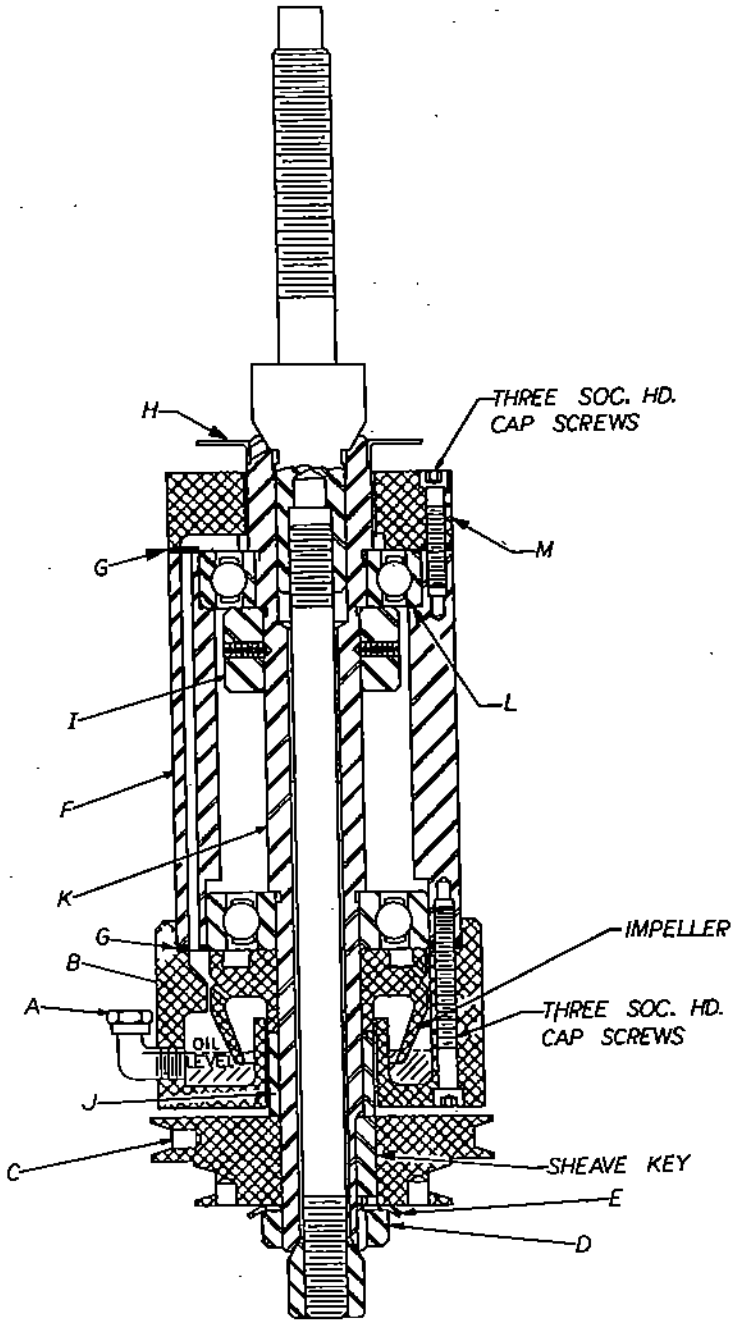

Fig. 4

MITER GAUGE ADJUSTMENT:

The miter gauge is used when doing accurate end grain cutting and to assist in handling certain types of parts. To adjust the stops to the 90 deg. and 45 deg. angles, a combination square can be used as a gauge along with a screwdriver and 5/16" open end wrench (Fig.5).

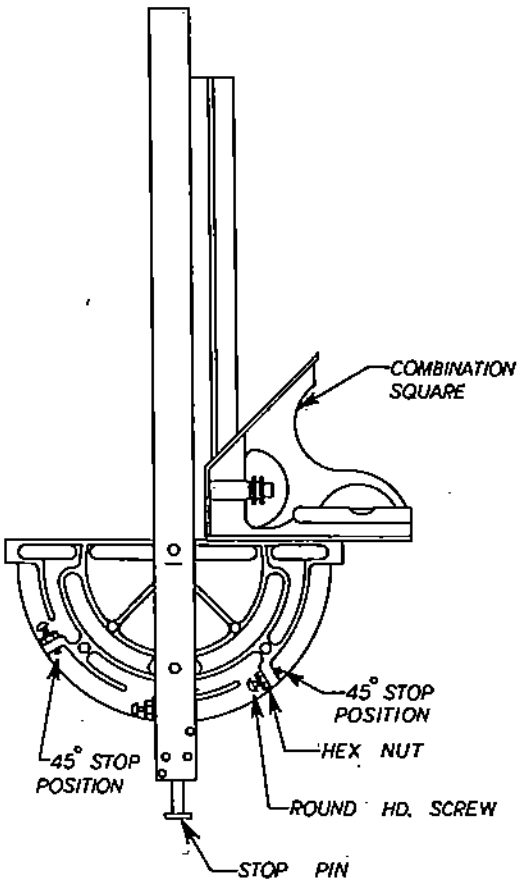

SHOWN IN 90° STOP POSITION IN BOTTOM VIEW

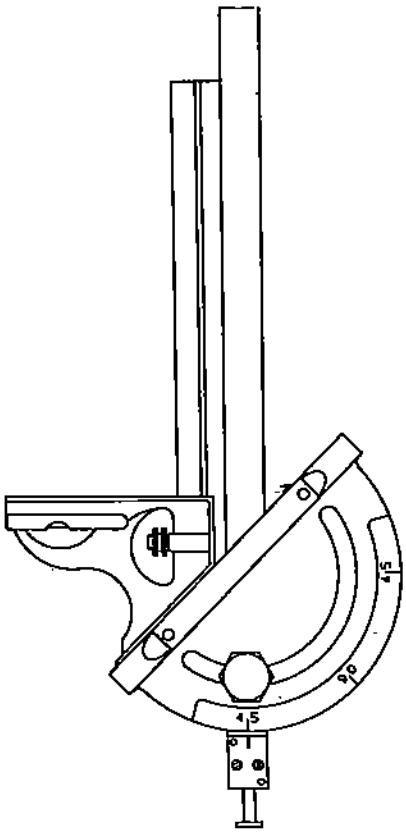

Fig. 5

BELT TENSION:

The main belt from the quill assembly to the motor is a standard type vee belt and should not be over tensioned. To remove or replace the belt, loosen the two hex head cap screws, clamping the motor base to the quill slide, and slide the motor base towards the quill. Remove the belt and replace it. Slide the motor base away from the quill applying a light tension in the belt and tightening the mounting screws. Push in on the belt midway between the pulleys. It should give about one inch before it becomes taut. Readjust as required.

CHANGING SPEEDS:

If the belt is properly tensioned, changing speeds will be easy. It will be accomplished by rolling the belt off of one pulley set then rolling it on to the other set by placing it around the smaller pulley, getting it started around the larger pulley and rotating that pulley until the belt snaps into the groove.

QUILL SLIDE ADJUSTMENT:

Periodically due to wear, the quill slide will develope side play. This will be noticed when clamping the slide in position. There will be a definite movement of the top of the spindle. To adjust the slide, loosen the gib screw hex nuts Fig.6.

and adjust the gib screws in until they lightly tighten. Lock the gib nuts down to provide the slight play that is needed to allow the slide to move freely without play. If the slide is hard to move, readjust gib screws.

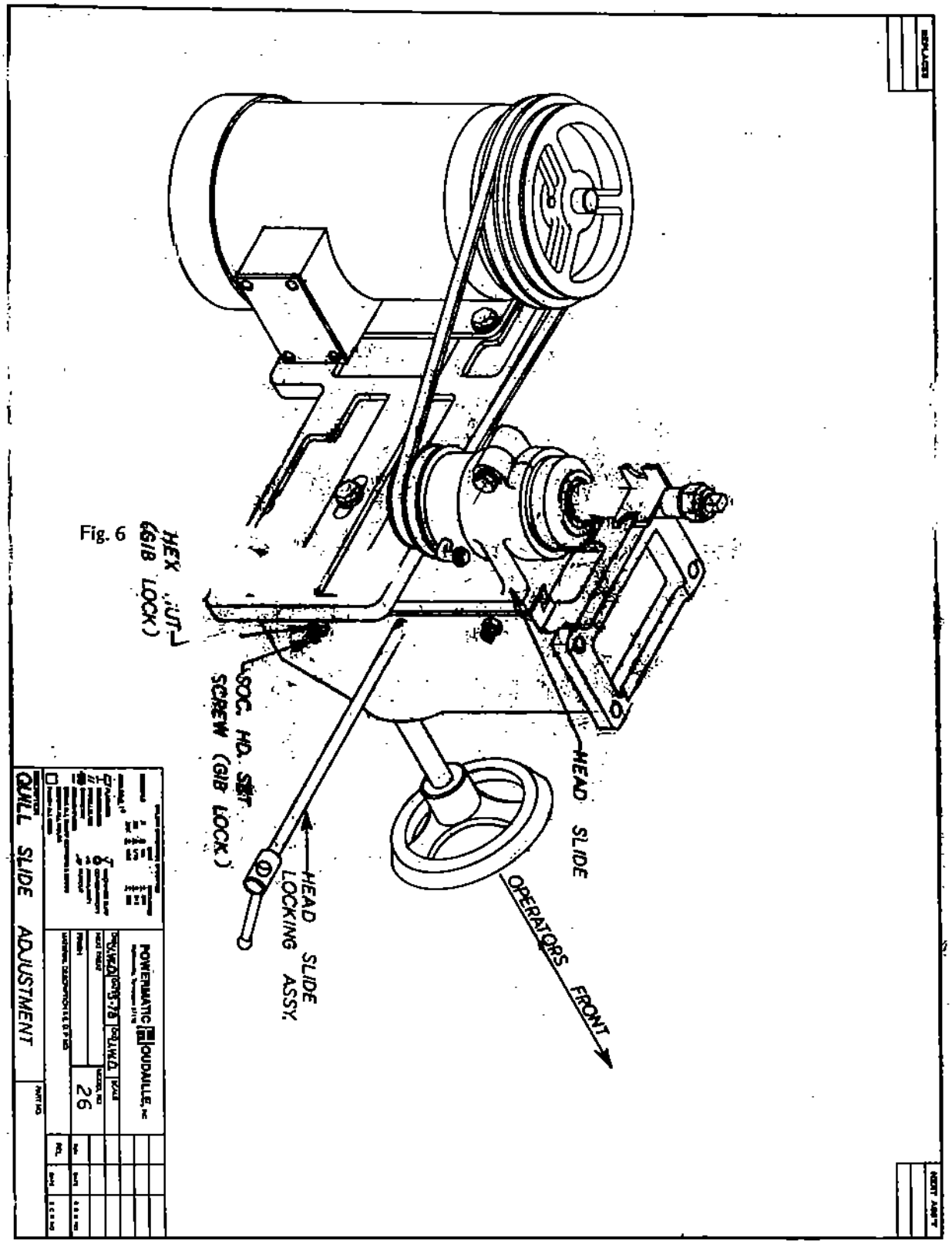
HEAD SLIDE
OPERATORS FRONT
HEAD SLIDE LOCKING ASSY.
SOC. HD. SET SCREW (GIB LOCK)
HEX NUT (GIB LOCK)
POWERMATIC
OUDAILLE, INC.
26
QUILL SLIDE ADJUSTMENT

Fig. 6

MODEL 26 SHAPER – DIMENSIONAL DRAWING

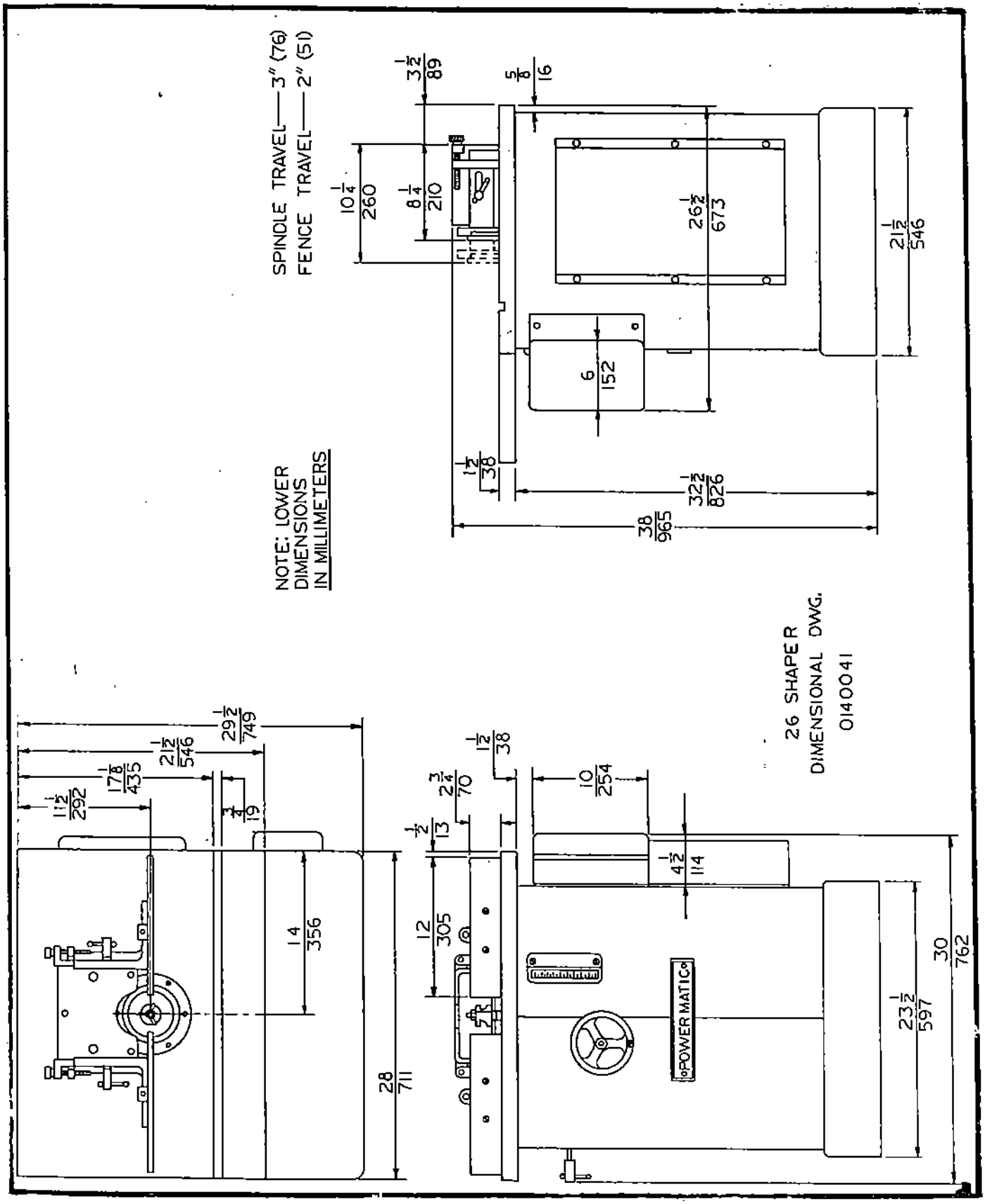

Fig. 7

MODEL 26 SHAPER – STAND & TABLE ASSEMBLY

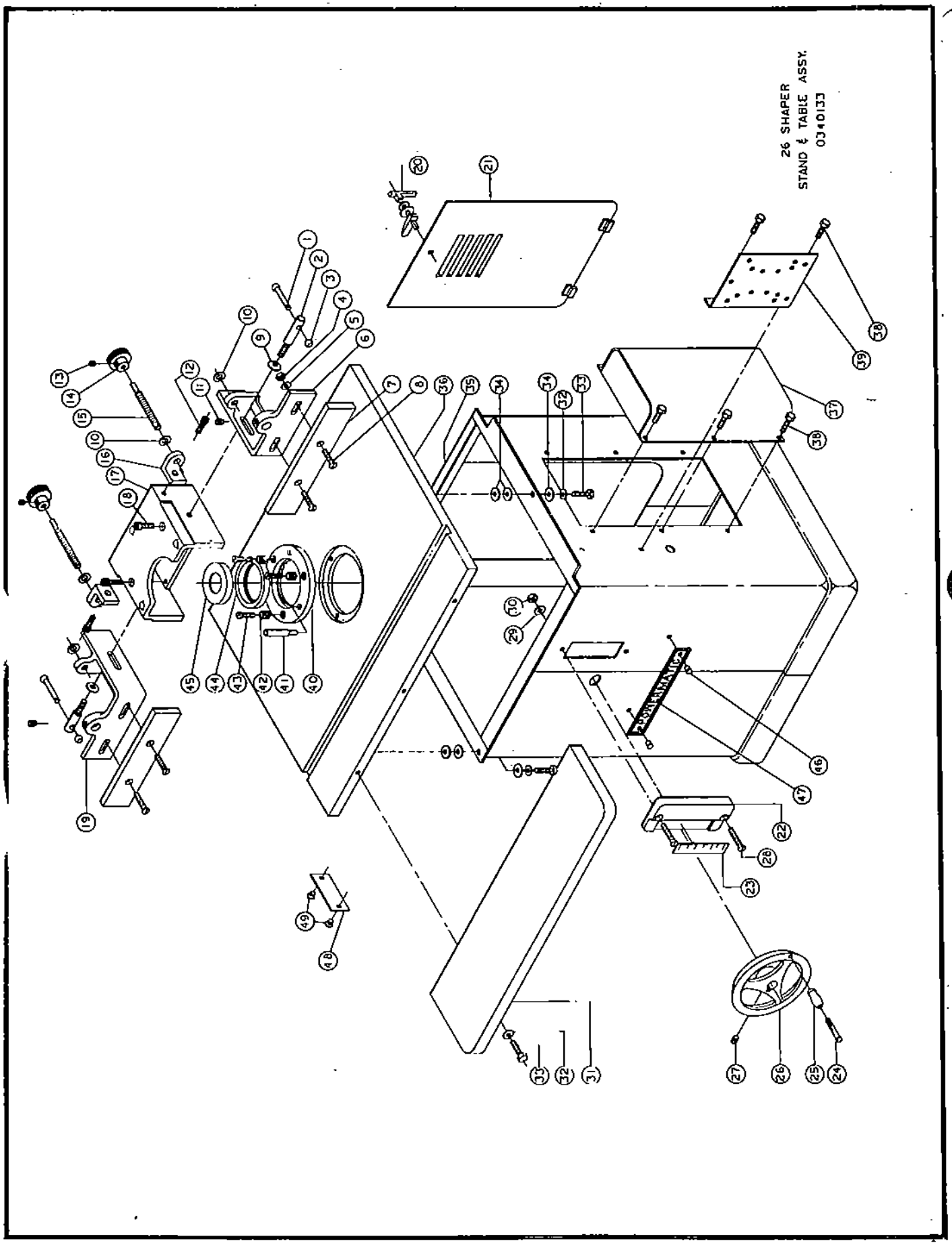

MODEL 26 SHAPER – STAND & TABLE ASSEMBLY

ITEM NO.	PART NO.	DESCRIPTION	QTY.
	2195003	FENCE ASSY., SHAPER (ITEMS 1 THRU 19)	
	2695008	SCREW, LOCK ASSY. (ITEMS 1 THRU 3)	2
1	3268002	HANDLE	1
2	3695003	SCREW, LOCK	1
3	3406016	KNOB, HANDLE	1
4	6515007	NUT, HEX JAM, 5/16–18	4
5	6861205	WASHER, FLAT, 5/16" ZINC PLATED	4
6	3063074	BRACKET, MOUNTING, FENCE SHAPER, R.H.	1
7	3195007	FENCE, BOARD	2
8	6715051	SCR., FLAT HD. MACH., 5/16–18 X 1/2" (ZINC PLATED	4
9	3838203	WASHER, BEVEL, LOCK SCR.	2
10	6811281	SPACER, 3/8 X 5/8 X .032"	4
11	6715013	SCR., SOC. SET, CUP PT., 5/16–18 X 3/8"	2
12	6715025	SCR., SOC. HD. CAP, 5/16–18 X 3/4"	2
13	6714004	SCR., SOC. SET, CUP PT., 1/4–20 X 1/4"	2
14	3406005	KNOB, ADJUSTING SCREW	2
15	3690005	SCREW, ADJUSTING	2
16	3064035	BRACKET, FENCE	2
17	3250060	GUARD, SHAPER BODY	1
18	6716012	SCR., SOC. HD. CAP, 3/8–16 X 1"	2
19	3063073	BRACKET, MOUNTING, FENCE SHAPER, L.H.	1
	2136001	DOOR ASSY. (ITEMS 20 & 21)	
20	6440003	LATCH, No. 61-1-1-0	1
21	2136004	DOOR ASSY. (WELDMENT)	1
	2689001	SCALE ASSY., HEIGHT ADJ. (ITEMS 22 & 23)	
22	3481012	PLATE, MTG., HEIGHT ADJ.	1
23	3684203	SCALE, PLATE	1
	2271004	HANDWHEEL ASSEMBLY (ITEMS 24 THRU 27)	
24	6624006	PIN, GROOVE, 1/4 X 3" LG.	1
25	3268201	HANDLE	1
26	3271051	HANDWHEEL, 6" DIA.	1
27	6715013	SCR., SOC. STE, 5/16–18 X 3/8"	1
28	6714057	SCR., FLAT HD., 1/4–20 X 1-1/4"	2
29	6514001	NUT, HEX, 1/4–20	2
30	6861100	WASHER, LOCK, 1/4"	2
31	3186008	EXTENSION, 8" TABLE	1
32	6861300	WASHER, LOCK, 3/8"	6
33	6716031	SCR., HEX HD., 3/8–16 X 1"	6
34	6861301	WASHER, FLAT, 3/8"	9
35	2759006	STAND ASSY., SHAPER (WELDMENT)	1
36	3797042	TABLE, SHAPER	1
37	2104003	COVER ASSY., MOTOR (WELDMENT)	1
38	6746023	SCR., HEX HD., 1/4–20 X 5/8" (SELF-TAPPING)	8
39	3063009	BRACKET, SWITCH MTG.	1
40	3595013	PLATE, SHAPER TABLE	1
41	3585014	PIN, STARTER	1
42	3696201	SCREW, SET	3
43	6714037	SCR., FILLISTER HD., 1/4–20 X 1" (PLATED)	3
44	3328202	INSERT, RING	1
45	3078007	CAP	1
	2388035	KIT ¼LATE, SHAPER (ITEMS 46 THRU 51)	
46	6680020	RIVET, SOUTHCO ALUM., 5/32 X 1/4" LG.	2
47	3312251	I.D. PLATE, POWERMATIC	1
48	3312228	I.D. PLATE, SERIAL & MODEL NUMBER	1
49	6747000	SCR., DRIVE, No. 4 X 3/16" (NICKEL PLATED)	2
50	3408206	LABEL, CAUTION SPINDLE SHIPPED DRY (NOT SHOWN)	1
51	3330283	PLATE, SAFETY (NOT SHOWN)	1

MODEL 26 SHAPER – BODY ASSEMBLY

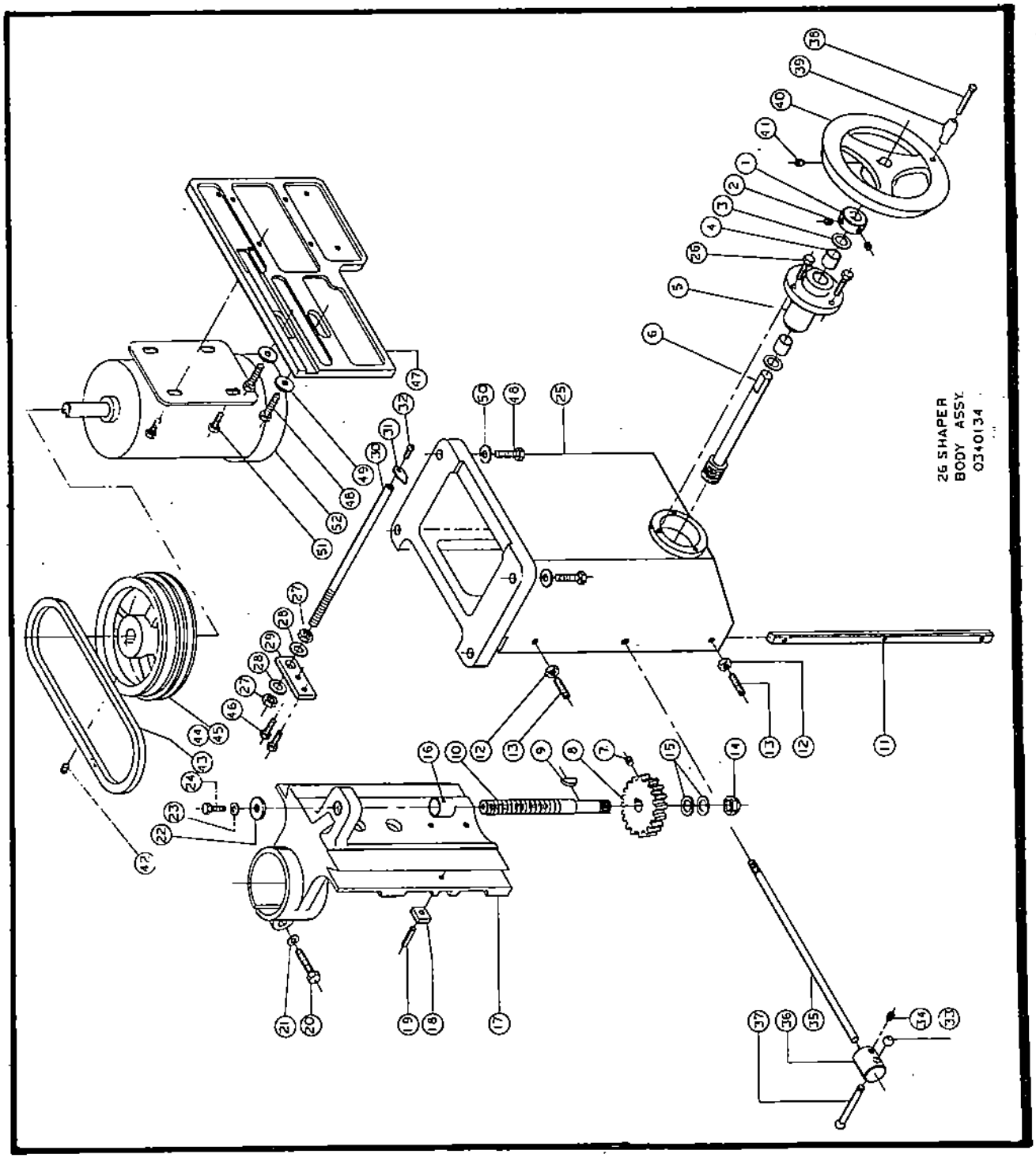

Fig. 9

MODEL 26 SHAPER – BODY ASSEMBLY

ITEM NO.	PART NO.	DESCRIPTION	QTY.
	2277001	HEAD ASSY., SLIDE (ITEMS 1 THRU 26)	
	2586002	PINION ASSY., WORM GEAR (ITEMS 1 THRU 6)	
1	3096244	COLLAR	1
2	6715015	SCR., SOC. SET, 5/16–18 X 1/4"	2
3	6861901	WASHER, FLAT, NYLATRON 3/4" E-12	2
4	6095025	BUSHING, BRONZE 3/4 I.D. X 7/8 O.D. X 3/4"	2
5	3070006	BUSHING, ADJ. SHAFT	1
6	3586008	PINION	1
	2690003	SCREW ASSY., HEAD RAISING (ITEMS 7 THRU 10)	
7	6714004	SCR., SOC. SET, 1/4–20 X 1/4"	1
8	3237003	GEAR, HEAD RAISING, SPIRAL	1
9	6420001	KEY, WOODRUFF No. 606	1
10	3691003	SCREW, ELEVATING	1
11	3244039	GIB, HEAD SLIDE	1
12	6515007	NUT, HEX JAM, 5/16"	2
13	6715008	SCR., SOC. HD. SET. 5/16–18 X 1"	2
14	6520009	NUT, HEX THIN HEIGHT, 5/8 –11, FLEXLOC, 31 FKF-1011	1
15	6861702	WASHER, NYLATRON, 5/8"	2
16	3735006	SPACER, ELEVATING SCREW	1
17	3730012	SLIDE, HEAD	1
18	3387002	KEY, MOTOR BASE	2
19	6626028	PIN, SPRING, 3/16 X 1/2"	2
20	6716032	SCR., HEX HD., 3/8–16 X 1-1/2"	1
21	6861300	WASHER, LOCK, 3/8"	1
22	3837002	WASHER, ELEVATING SCREW STOP	1
23	6861200	WASHER, LOCK, 5/16"	4
24	6715042	SCR., HEX HD., 5/16–18 X 3/4"	1
25	3057006	BODY, SHAPER	1
26	6715032	SCR., HEX HD., 5/16–18 X 1"	3
	2670002	ROD ASSY., POINTER (ITEMS 27 THRU 32)	
27	6516009	NUT, HEX JAM, 3/8–16	2
28	6861301	WASHER, FLAT, 3/8"	2
29	3042004	BASE, POINTER ROD	1
30	3670009	ROD, POINTER	1
31	3604001	POINTER	1
32	6706035	SCR., RD. HD. MACH., 6–32 X 1/4" (ZINC PLATED)	1
	2708004	SHAFT HEAD LOCK ASSY. (ITEMS 33 THRU 37)	
33	3406016	KNOB, HANDLE	1
34	6715016	SCR., SOC. SET, CUP PT., 5/16–18 X 5/16"	1
35	3708001	SHAFT, LOCK	1
36	3301004	HUB, LOCK SHAFT	1
37	3268002	HANDLE	1
	2271004	HANDWHEEL ASSY., (ITEMS 38 THRU 41)	
38	6624006	PIN, GROOVE, 1/4 X 3" LG.	1
39	3268201	HANDLE	1
40	3271051	HANDWHEEL, 6" DIA:	1
41	6715013	SCR., SOC. HD. SET, 5/16–18 X 3/8"	1
42	6715016	SCR., SOC. SET, CUP PT., 5/16–18 X 5/16"	1
43	6077010	BELT, "V", 4L-340	1
44	3718009	SHEAVE, MOTOR, STEP 5/8" BORE (ALT. FOR 3781011)	1
45	3718011	SHEAVE, MOTOR, STEP, 7/8" BORE	1
46	6714127	SCR., HED HD., 1/4–20 X 1/2"	2
47	3042047	BASE, MOTOR	1
48	6718010	SCR., HEX HD. CAP, 1/2–13 X 1-1/2"	6
49	3838008	WASHER, BEVEL	2
50	6861500	WASHER, LOCK, 1/2"	4
51	6715006	SCR., HEX WASHER HD., 5/16–18 X 3/4"	4
52	6471100	MOTOR, ELEC, 1HP, 1PH, 3600RPM, 115/230V, 56 FR. TEFC	1
	6471118	MOTOR, ELEC, 1HP, 3PH, 3600RPM, 200V 56FR. TEFC	1
	6471119	MOTOR, ELEC. 1HP, 3PH, 3600RPM, 230/460V, 56 FR. TEFC	1
	6471400	MOTOR, ELEC, 1-1/2HP, 1PH, 3600 RPM, 115/230V, 56 FR. TEFC	1
	6471412	MOTOR, ELEC., 1-1/2HP, 3PH, 3600RPM, 200V, 56FR, TEFC	1
	6471413	MOTOR, ELEC., 1-1/2HP, 3PH, 3600 RPM, 230/460V, 56 FR. TEFC	1
	6471706	MOTOR, ELEC., 2HP, 3PH, 3600RPM, 230/460V, 145T FR. TEFC	1
	6471707	MOTOR, ELEC., 2HP, 1PH, 3600RPM, 115/230V, 145T FR. TEFC	1
	6471717	MOTOR, ELEC., 2HP, 3PH, 3600RPM, 200V, 145T FR. TEFC	1

MODEL 26 SHAPER – QUILL ASSEMBLY, WITH 1" SOLID SPINDLE

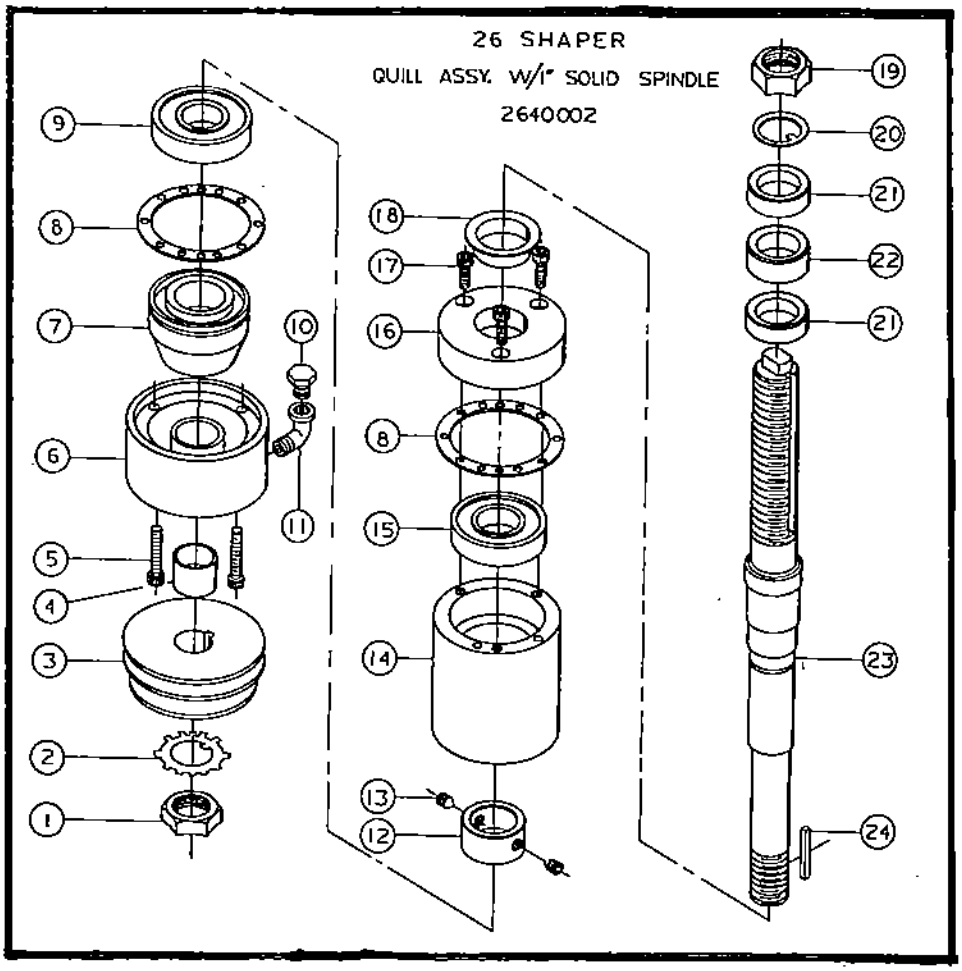

Fig. 10

ITEM NO.	PART NO.	DESCRIPTION	QTY.
1	3526001	NUT, HIGH SPEED SPINDLE .785–28 X 1-1/8 X 3/8"	1
2	6864004	WASHER, BEARING LOCK	1
3	3718008	SHEAVE, SPINDLE STEP	1
4	3735007	SPACER, .790 I.D. X 1.0 O.D. X 7/8"	1
5	6708022	SCR., SOC. HD. CAP, 8-32 X 1/2" (ONE NOT SHOWN)	3
6	3657001	RESERVOIR	1
7	3324002	IMPELLER	1
8	3234207	GASKET, UPPER & LOWER	2
9	6060038	BEARING, BALL, NEW DEPT., No. 3304, RADIAL, SGL. ROW	1
10	6607009	OILER, GITS No. 543	1
11	6284103	FITTING, 1/8" ST. ELBOW, 90°	1
12	3096007	COLLAR, .8755 I.D. X 1-1/2 O.D. X .875" WIDE	1
13	6715161	SCR., SOC. SET, CONE PT., 5/16–18 X 3/8", NYLOC	2
14	3298030	HOUSING, BEARING	1
15	6060039	BEARING, BALL, NEW DEPT., No. 3305, RADIAL, SGL. ROW	1
16	3078025	CAP, UPPER	1
17	6708018	SCR., SOC. HD. CAP, 8-32 X 3/4"	3
18	3731001	SLINGER, CHIP	1
19	3526006	NUT, 1" SPINDLE, 1-14 X 1-1/2 X 5/8" THICK	1
20	3840004	WASHER, 1" SPIMDLE .087" THICK	1
21	3742006	SPACER, 1" SPINDLE, 1/2" THICK	2
22	3742007	SPACER 1" SPINDLE, 3/4" THICK	1
23	3024008	ARBOR, 1" SPINDLE	1
24	3388006	KEY, 3/16 X 3/16 X 1-1/4"	1

MODEL 26 SHAPER – SPINDLE ASSEMBLY (INTERCHANGEABLE SPINDLE)

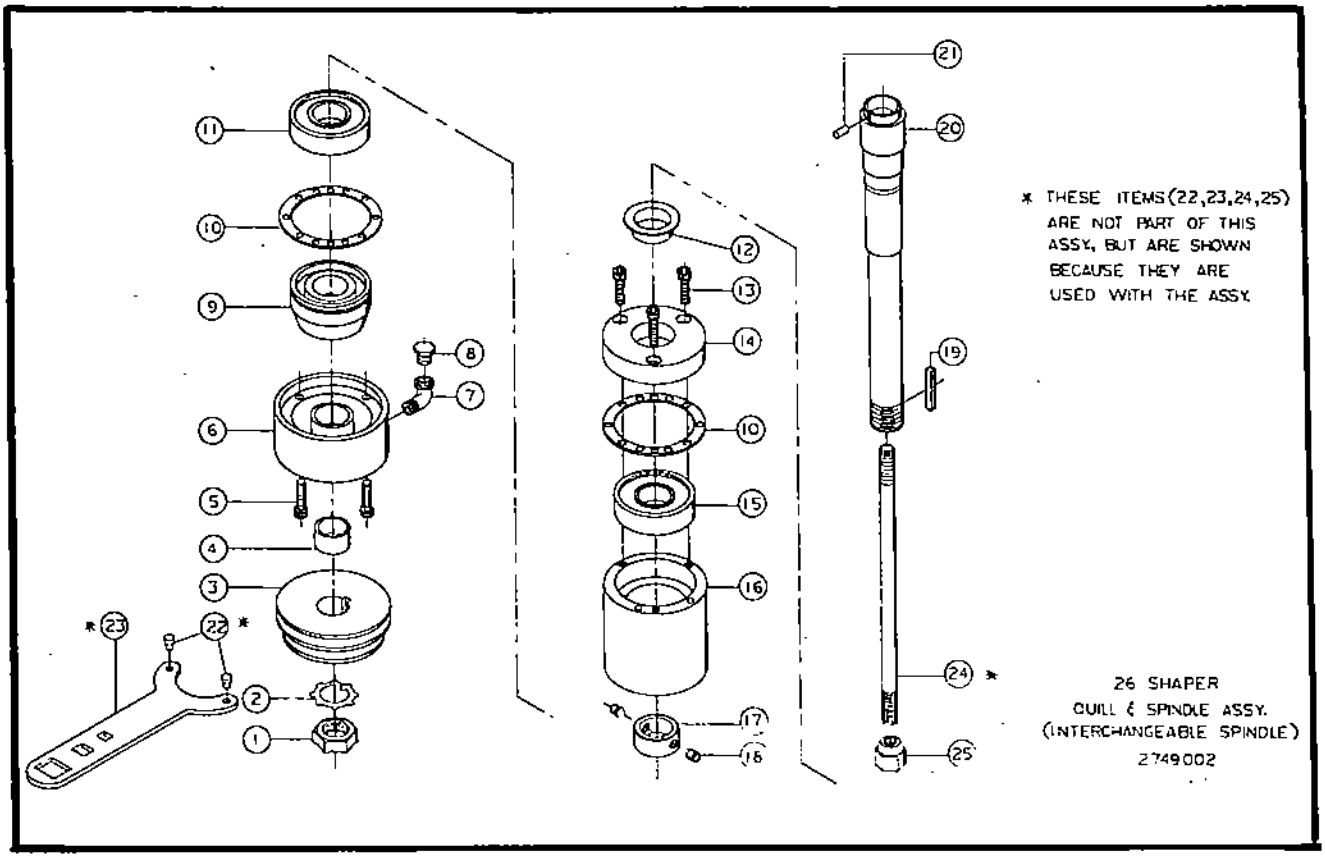

Fig.11

MODEL 26 SHAPER – SPINDLE ASSEMBLY (INTERCHANGEABLE SPINDLE) PARTS LIST

ITEM NO.	PART NO.	DESCRIPTION	QTY.	ITEM NO.	PART NO.	DESCRIPTION	QTY.
	2749002	QUILL & SPINDLE ASSEMBLY (ITEMS 1 THRU 21)		13	6708018	SCR., SOC. HD. CAP, 8-32 X 3/4"	3
1	3526001	NUT, HIGH SPEED SPINDLE	1	14	3078028	CAP, UPPER	1
2	6864004	WASHER, BEARING LOCK W-04	1	15	6060039	BEARING, BALL, RADIAL, SINGLE ROW, No. 3205	1
3	3718008	SHEAVE, STEP SPINDLE	1	16	3298030	HOUSING, BEARING	1
4	3735007	SPACER, 1" O.D.	1	17	3096007	COLLAR	1
5	6708022	SCR., SOC. HD. CAP, 8-32 X 1-1/2"	3	18	6715161	SCR., SOC. SET, 5/16-18 X 3/8" NYLOK	2
6	3657001	RESERVOIR	1	19	3388006	KEY, 3/16 X 3/16 X 1-1/4"	1
7	6284103	FITTING, 1/8" STREET ELBOW 90°	1	20	3749012	SPINDLE	1
8	6607009	OILER, GITS No. 543	1	21	3583208	PIN, DOWEL	1
9	3324002	IMPELLER	1		2868001	WRENCH, QUILL ASSEMBLY (ITEMS 22 & 23	
10	3234207	GASKET	2	22	3585212	PIN, SHOULDER	2
11	6060038	BEARING, BALL, RADIAL, SINGLE ROW, No. 3304	1	23	3868005	WRENCH, QUILL	1
12	3731001	SLINGER, CHIP	1	24	3140001	DRAWBAR, SPINDLE	1
				25	3256202	NUT, SPINDLE DRAWBAR	1

Fig. 3

MODEL 26 SHAPER – SPINDLE ASSEMBLIES
(STANDARD OR OPTIONAL AS NOTED IN PARTS LIST)

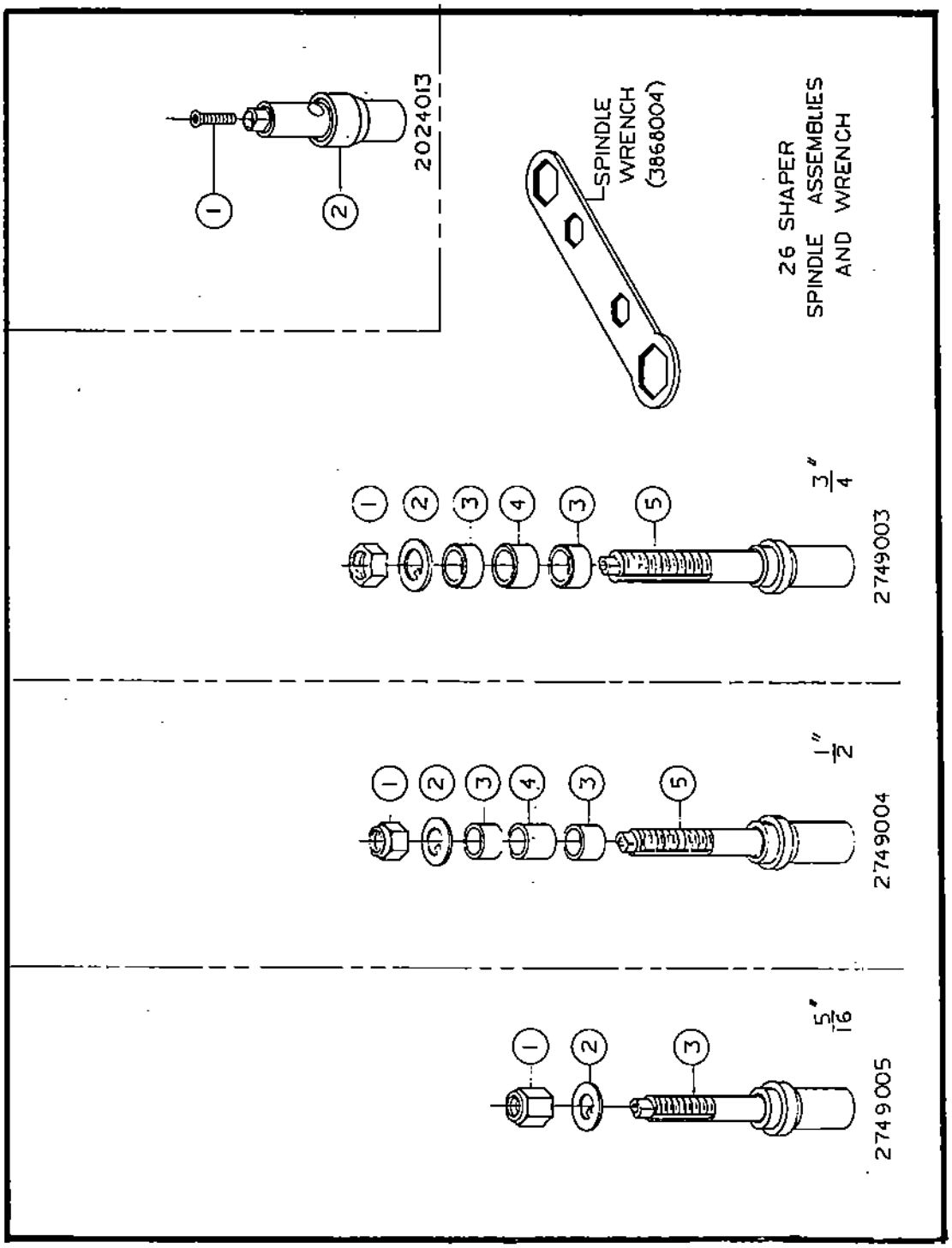

Fig. 12

MODEL 26 SHAPER–SPINDLE ASSEMBLIES

ITEM NO.	PART NO.	DESCRIPTION	QTY.
	2749005	5/16" SPINDLE ASSEMBLY (ITEMS 1 THRU 3) (OPTIONAL)	
1	3526003	NUT, SPINDLE, 5/16"	1
2	3840001	WASHER, SPINDLE LOCK, 5/16"	1
3	3749015	SPINDLE, 5/16"	1
	2749004	1/2" SPINDLE ASSY., (ITEMS 1 THRU 5) (STANDARD)	
1	3526004	NUT, SPINDLE, 1/2"	1
2	3840002	WASHER, SPINDLE LOCK, 1/2"	1
3	3742002	SPACER, SPINDLE, 1/2 X 1/2"	2
4	3742003	SPACER, SPINDLE, 1/2 X 3/4"	1
5	3749016	SPINDLE, 1/2"	1
	2749003	3/4" SPINDLE ASSY., (ITEMS 1 THRU 5) (STANDARD)	
1	3526005	NUT, SPINDLE, 3/4"	1
2	3840003	WASHER, SPINDLE LOCK, 3/4"	1
3	3742004	SPACER, SPINDLE	2
4	3742005	SPACER, SPINDLE	1
5	3749017	SPINDLE, 3/4"	1
	2024013	ARBOR STUB ASSY., (ITEMS 1 & 2) (OPTIONAL)	
1	6715199	SCR., FLAT HD. SOC., 5/16–18 X 1"	1
2	3024006	ARBOR, STUB, 1/2"	1
	3868004	WRENCH, SPINDLE	1

MODEL 26 SHAPER – GUARD, SAFETY RING (OPTIONAL)

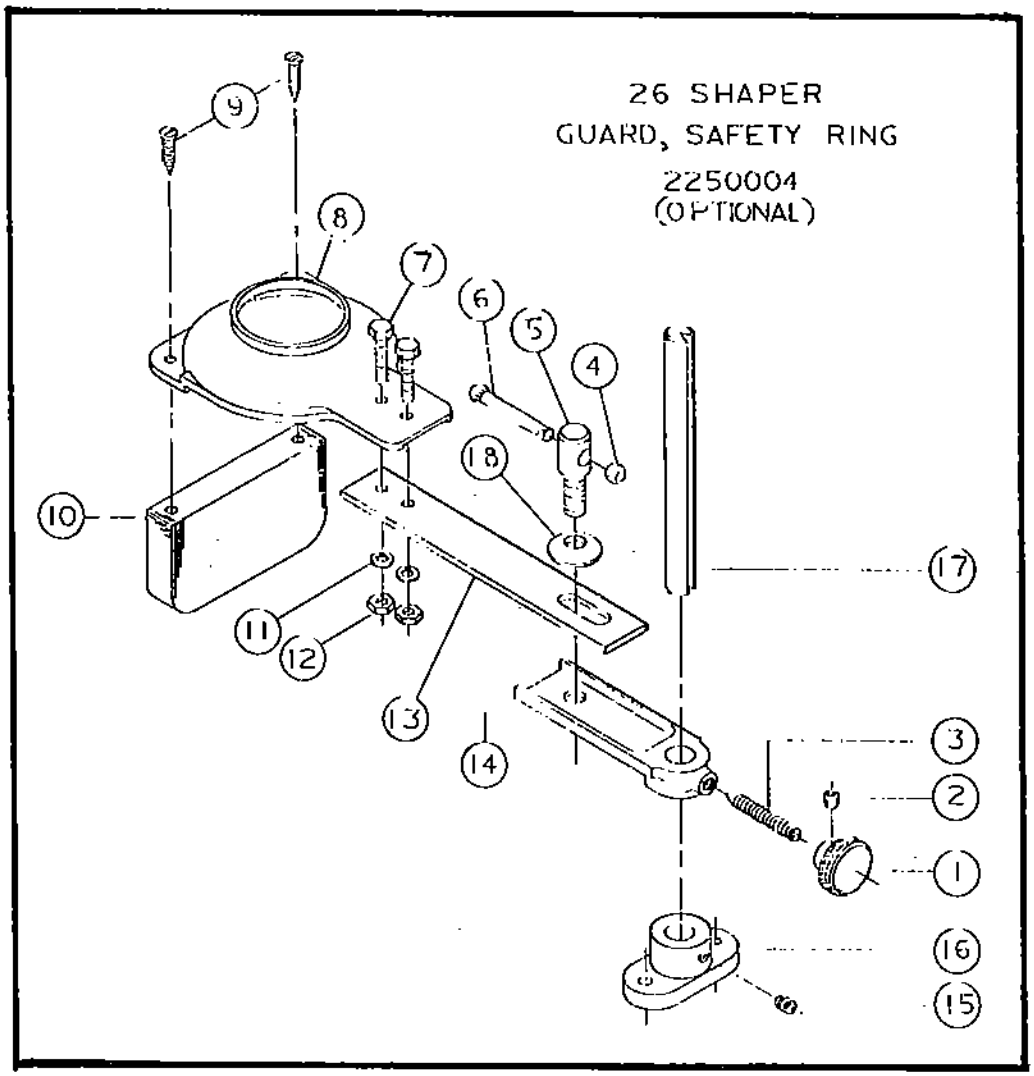

Fig. 13

MODEL 26 SHAPER – GUARD, SAFETY RING

ITEM NO.	PART NO.	DESCRIPTION	QTY.
	2406001	KNOB ASSY., (ITEMS 1 THRU 3)	
1	3406005	KNOB, SCREW ADJ., CHROME PLATED	1
2	6714004	SCR., SOC. SET, CUP PT., 1/4 – 20 X 1/4"	1
3	6716117	SCR., SET, 60° STUD PT., 3/8–16 X 1-1/2"	1
	2695027	SCREW, LOCK ASSEMBLY (ITEMS 4 THRU 6)	
4	3406016	KNOB, HANDLE	1
5	3695039	SCREW, LOCK	1
6	3268002	HANDLE, LOCK SCREW	1
7	6715035	SCR., HEX HD. CAP, 5/16–18 X 3/4"	2
8	3250043	GUARD, SHAPER	1
9	6748005	SCR., RD. HD. WOOD, 10 X 1"L	2
10	3782006	SUPPORT, GUARD	1
11	6861200	WASHER, LOCK, 5/16"	2
12	6515007	NUT, HEX JAM, 5/16–18	2
13	3044015	BAR, ADJUST	1
14	3064037	BARCKET, SHAPER, GUARD ADJUSTING	1
15	6716009	SCR., SOC. SET, CUP PT., 3/8–16 X 1/2"	1
16	3064036	BRACKET, SHAPER, GUARD, MOUNTING	1
17	3670012	ROD, HEIGHT ADJUSTING	1
18	3338008	WASHER, LOCKSCREW	1

MODEL 26 SHAPER – MITER GAUGE ASSEMBLY (OPTIONAL)

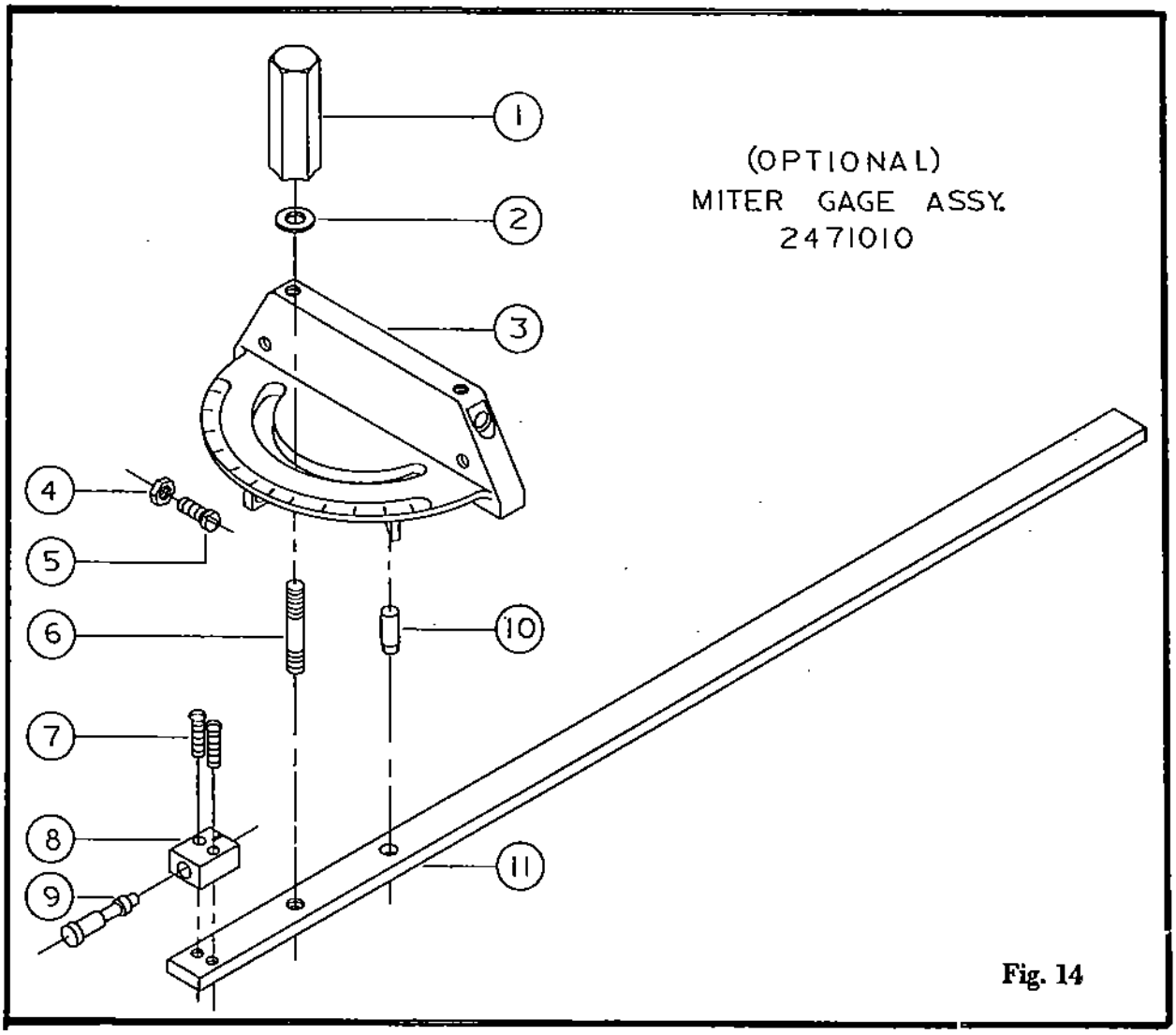

Fig. 14

MODEL 26 SHAPER – MITER GAUGE ASSEMBLY (OPTIONAL) (PARTS LIST)

ITEM NO.	PART NO.	DESCRIPTION	QTY.
1	3268050	KNOB, MITER	1
2	6861101	WASHER, FLAT, 1/4"	1
3	3230007	GAUGE, MITER	1
4	6506003	NUT, HEX, 6-32 (PLATED)	3
5	6706094	SCR., RD. HD. MACH., 6-32 X 1/2"	3
6	3695220	SCREW, LOCK	1
7	6706041	SCR., RD. HD. MACH., 6-32 X 3/4"	2
8	3055101	BLOCK, POINTER	1
9	3582097	PIN, STOP	1
10	6623012	PIN, DOWEL, 1/4 X 1"	1
11	3044312	BAR, MITER, GAUGE	1

MODEL 26 SHAPER - GUIDE ASSEMBLY, HOLD DOWN (OPTIONAL)

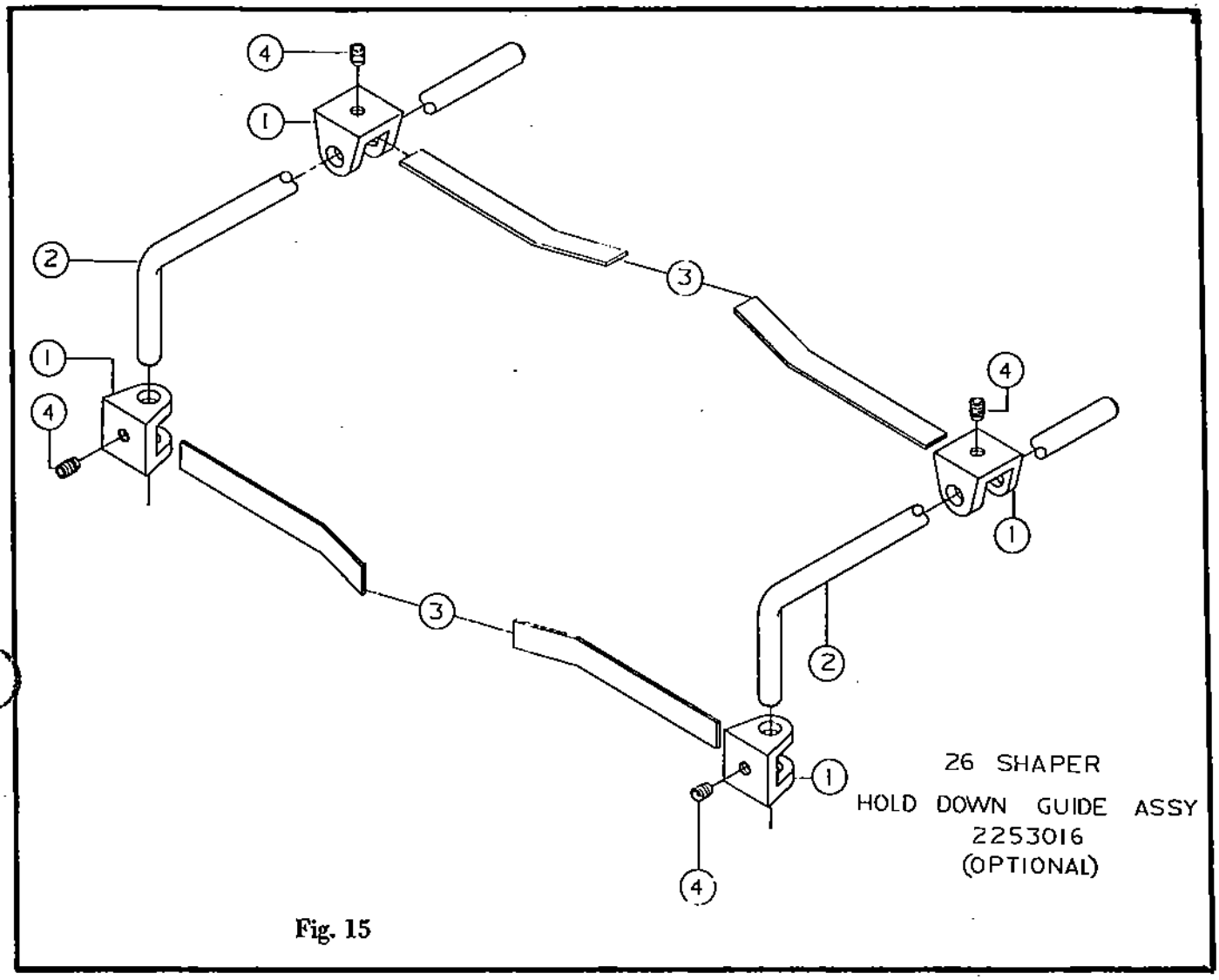

Fig. 15

MODEL 26 SHAPER – GUIDE ASSEMBLY, HOLD DOWN (OPTIONAL) (PARTS LIST)

ITEM NO.	PART NO.	DESCRIPTION	QTY.
1	3289008	HOLDER, SPRING	4
2	3670057	ROD, MATERIAL HOLD DOWN	2
3	3767008	STRAP, FENCE	4
4	6715014	SCR., SOC. SET, CUP PT., 5/16–18 X 1/2"	4

MODEL 26 SHAPER – WIRING DIAGRAM

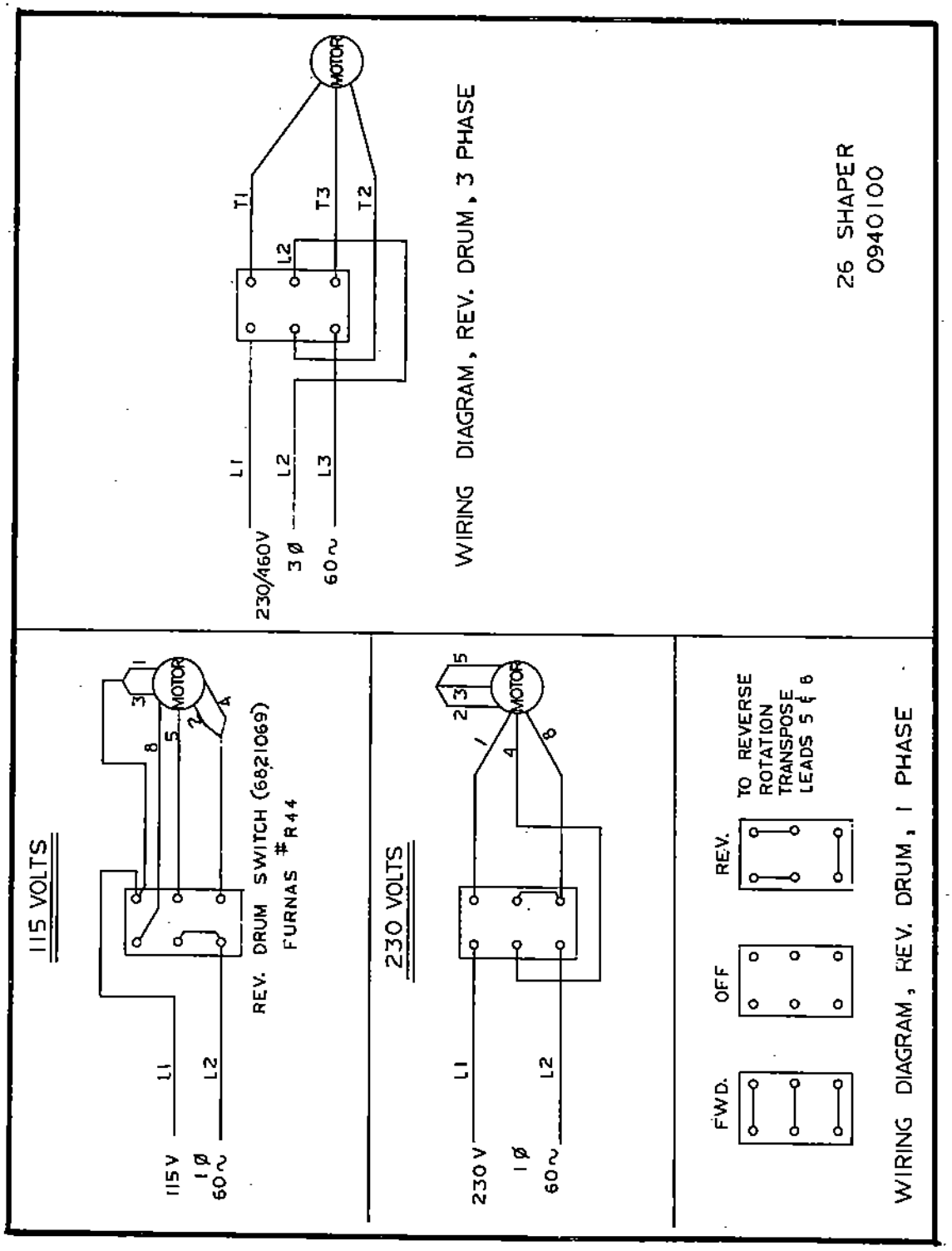

Fig. 16

MODEL 26 SHAPER – SCHEMATIC, COMPOSITE ELECTRICALS

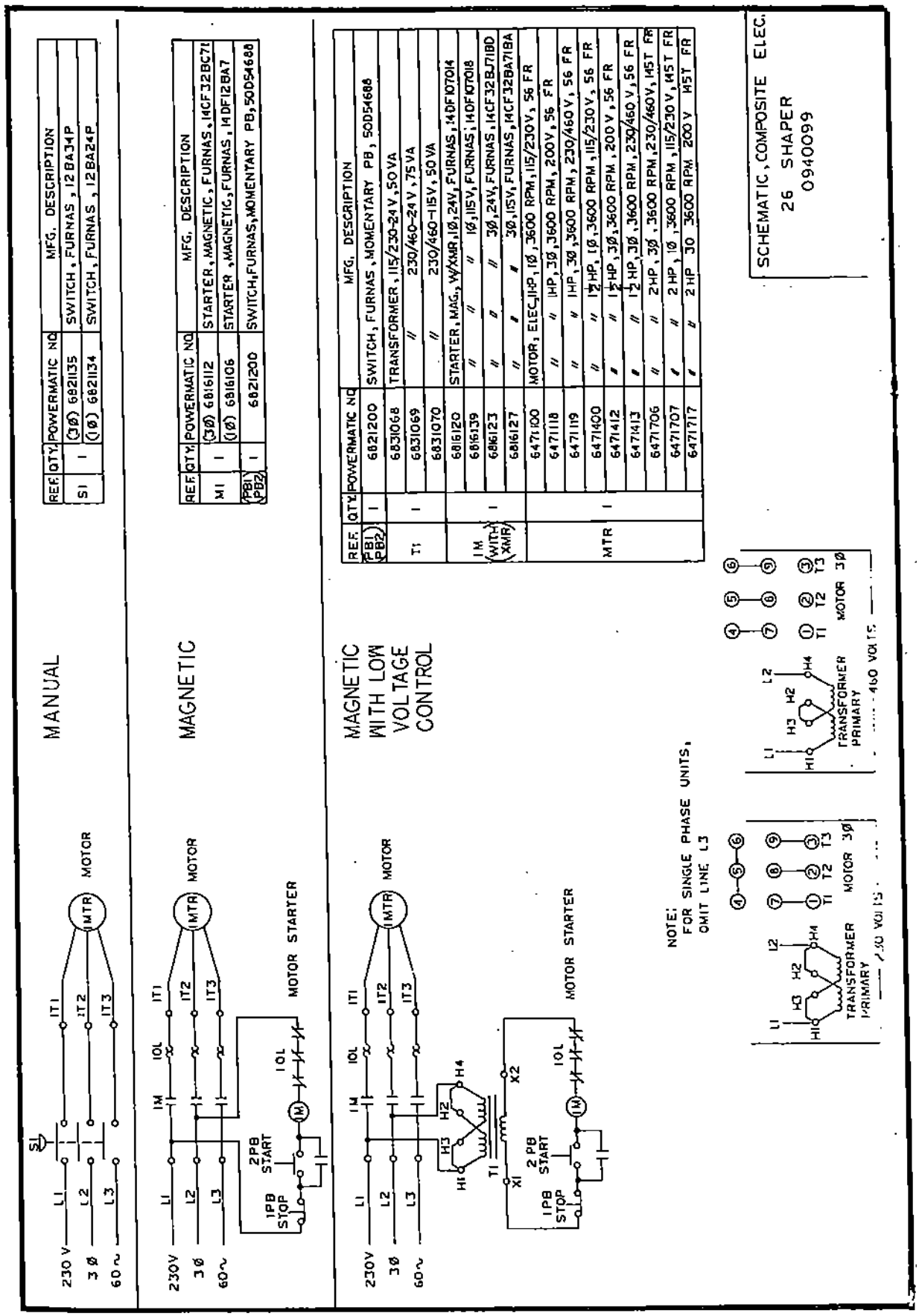

REF.	QTY.	POWERMATIC NO.	MFG. DESCRIPTION
S1	1	(3Ø) 6821135	SWITCH, FURNAS, 12BA34P
		(1Ø) 6821134	SWITCH, FURNAS, 12BA24P

REF.	QTY.	POWERMATIC NO.	MFG. DESCRIPTION
M1	1	(3Ø) 6816112	STARTER, MAGNETIC, FURNAS, 14CF32BC71
		(1Ø) 6816106	STARTER, MAGNETIC, FURNAS, 14DF12BA7
PB1 PB2	1	6821200	SWITCH, FURNAS, MOMENTARY PB, 50D54688

REF.	QTY.	POWERMATIC NO.	MFG. DESCRIPTION
PB1 PB2	1	6821200	SWITCH, FURNAS, MOMENTARY PB, 50D54688
T1	1	6831068	TRANSFORMER, 115/230-24 V, 50 VA
		6831069	" 230/460-24 V, 75 VA
		6831070	" 230/460-115 V, 50 VA
1M (WITH XMR)	1	6816120	STARTER, MAG., W/XMR, 1Ø, 24V, FURNAS, 14DF10704
		6816139	" 1Ø, 115V, FURNAS, 14DF10718
		6816123	" 3Ø, 24V, FURNAS, 14CF32BJ71BD
		6816127	" 3Ø, 115V, FURNAS, 14CF32BA71BA
MTR	1	6471100	MOTOR, ELEC., ½HP, 1Ø, 3600 RPM, 115/230V, 56 FR
		6471118	" ½HP, 3Ø, 3600 RPM, 200V, 56 FR
		6471119	" ½HP, 3Ø, 3600 RPM, 230/460V, 56 FR
		6471400	" ½HP, 1Ø, 3600 RPM, 115/230V, 56 FR
		6471412	" 1½HP, 3Ø, 3600 RPM, 200V, 56 FR
		6471413	" 1½HP, 3Ø, 3600 RPM, 230/460V, 56 FR
		6471706	" 2HP, 3Ø, 3600 RPM, 230/460V, 145T FR
		6471707	" 2HP, 1Ø, 3600 RPM, 115/230V, 145T FR
		6471717	" 2HP 3Ø 3600 RPM 200V 145T FR

Fig. 17