POITRAS 12" (305mm) PLANER MODEL 6000

Made of high quality castings this planer is accurately machined to give trouble-free operation. The one-piece table 13" X 36" is the longuest of all tables of planers 12" or 14".

So take a few moments and read the following lines to get the maximum efficiency from your new machine.

INSTALLATION

Your planer is shipped in a wooden crate and wrapped in waterproof plastic. Remove the bolts that hold it to the crate and take away the polythene sheet.

The surface of the table and mechanisms have been covered with grease to prevent rusting. This grease should be cleaned off with a mild solvent, never use a paint solvent.

Your planer is now ready to be put in place. It is most important that the machine be carefully levelled both lengthwise and crosswise. Also check that equal pressure is applied on each corner in order to eliminate vibration.

N.B. *All parts numbers mentionned refer to drawing.*

Always contact your POITRAS dealer for information on any of our machines. Always quote your machine serial number when ordering parts.

The parts list and tools that are supplied with the machine must be kept in safe place.

ADJUSTMENTS

This planer leaves the factory completely adjusted and ready to operate, however a check up is recommended first to familiarize yourself with the machine and second to be sure that everything is in order.

TABLE

The table is raised or lowered by the handwheel at the left side. This handwheel turns the elevating shaft through helical gears which upon each turn lowers or raises the table 1/16" (1.6mm).
As the table must be raised and lowered easily, yet must not be loose, this adjustment should be checked and readjusted if needed. This is done by loosening the locknuts at the rear of the table, readjusting each screw and locking again. These parts should be kept always clean.

TABLE ROLLERS

The table rollers are most important in keeping stock feeding smoothly. They are adjusted by using a straight edge and a feeler gauge. Raise the rollers to .005" for hard wood and .010" for soft wood.
The adjustment is made under the table by the screws provided.
The outside table rollers are placed level with the table. Table rollers must not be set to high as they will cause undercutting at both ends of stock.

CUTTER-HEAD

When your planer is shipped, the knives are adjusted, however you should check the tightening of the bolts on the cylinder before starting the machine.
The cutting circle is 4 3/8" (111mm) diameter with 3 knives. It is very important that the knives be exactly parallel with the table otherwise the stock will be thicker on one side. The knives must all be set equal to a true circle otherwise the cutting load will be shared by only one or two knives and the finish of the stock will suffer accordingly.
The knives are held surely in place by combination chipbreaker wedge

clamps and square head screws. The knives should protrude about 1/16" (1.6mm) above the chipbreaker.

FEED ROLLERS

These rollers must be adjusted with care because they are most important in keeping the stock feeding smoothly.
To adjust the top rollers proceed as follows:
Two pieces of hard wood of exactly the same thickness are placed on the table one on each side. Then the table is raised until the knives just touch the wood. The adjusting screws at each end of the rollers are loosened and turned until they just touch the roller blocks. Then the two screws for the front roller (corrugated) are loosened 1/2 turn and the two screws for the rear roller (smooth) are loosened 1/4 turn, now all are locked in place with the jam nuts.
The pressure on the top feed rollers can be adjusted easily by tightening or loosening the screws on top ot the columns. Do not use more pressure than necessary to feed the stock.

CHIPBREAKER AND PRESSURE BAR

To adjust, use the same procedure as for the upper-rollers placing two equal pieces of hard wood on the table and raising it until the knives barely touch.
When the adjusting screws on the chipbreaker touch the roller blocks; they are loosened 1/2 turn and locked. The screws for the pressure bar are only loosened 1/4 turn and locked.

FEEDING CLUTCH SYSTEM

The feed rollers driving speed starts at right end of cutter-head, where a disc cluch system is installed. By mean of a "V" belt and a step pulley, power is transmitted to the rollers gearing and chains. Changing your "O" belt to a different step of pulley will give you, at choice, 18' (5.49m) or 40' (12.2m) per minute.
An off-center lever is located under the lower part of the right hand chain guard. This is used to change "V" belt from step, as well as to give adequate tension on the pulleys. A handle is provided to lock the lever into correct position and prevent slipping.

MAINTENANCE

-When you must sharpen the knives, a cutting angle of 30° to 35° is recommended for more efficiency .

-The knives must be kept sharp to obtain maximum performance. If the knives are left to become too dull, the finish will suffer accordingly.

-Knives adjustment after sharpening is made as follows:
Two pieces of hard wood dressed on both sides and of equal thickness are placed on the table under the cutter-head on each side. The Knives are inserted in the cutter-head and clamped just enough to hold them in place. Raise the table until the knives barely touch the wood. Rotate the cutter-head in a backward motion by hand and the wooden. blocks will force all the blades into the same position in the head. When the adjustment is finished tighten all the screws.

-Occasionnaly the surface of the rollers and of the table will become gummed-up, this should be wiped off but never scraped off.

-Keep your machine clean because an accumulation of chips could break parts and this would not be covered by warranty.

-For the lubrication here are the points you should oil or grease:

-Each day:

Grease the right side sprocket shaft (#90) with the grease fitting (#V-3)

-Once a week:

Oil: -The chains (#V-17 & V-18)
-The top and bottom guides for handwheel (#8 & 34)

Grease:
-The 4 feed rollers (#56,57 & 58)
-The chain-adjuster right and left (#30 & 31)
-The 98 teeth gear (#24) with grease fitting (#V-2)
The pulley 2 VO (#48) with grease fitting (#V-2)
-The feed rollers pulley (#25) with grease fitting (#V-2)

-Once a month:

Grease the table screwing blocks (#23) with grease fitting (#V-1).

MODEL: 6000	# DESSIN DRAWING#	REV:	# PIECE PART #	QUANT.	
DESCRIPTION		DESCRIPTION			
Tôle dessus de base	1	Base top sheet	6005	1	
Base	2	Base	6007	1	
Porte de la base	3	Base door	6008	1	
Arbre support du moteur 24"	4	Motor bracket rod 24"	6009	1	
Arbre support du moteur 28"	5	Motor bracket rod 28"	6010	1	
Couronne	6	Rim	6011	1	
Cylindre	7	Cylinder	6016	1	
Guide du haut pr roue à main	8	Top guide for handwheel	6023	1	
Côté gauche de la raboteuse	9	Left side of planer	6025	1	
Côté droit de la raboteuse	10	Right side of planer	6026	1	
Barre d'assemblage avant haut	11	Front top assembly bar	6027	1	
Barre d'assemblage du bas	12	Front bottom assembly bar	6028	2	
Boîte à billes gauche	15	Left bearing case	6031-1	1	
Boîte à billes droite	16	Right bearing case	6031-1A	1	
Couvercle de boîte à billes	17	Bearing case cover	6032	2	
Support de roulement avant	18	Front roller support block	6033	2	
Support de roulement de table	19	Table roller bracket	6034	4	
Support du casse-copeaux	20	Chipbreaker bracket	6035	1	
Casse-copeaux	21	Chipbreaker	6036	1	
Barre de serrage des couteaux	22	Knife holder	6037	3	
Boîte à vis de la table	23	Table screwing block	6038	2	
Engrenage 98 dents	24	98 teeth gear	6039	1	
Poulie pour avance des rouleaux	25	Feed rollers pulley	6040	1	
Poulie du cylindre	26	Cylinder pulley	6041	1	
Poulie moteur 3 VA 7" (bassev.)	27	Motor pulley 3 VA 7"(low speed)	6042	1	
Disque d'embrayage	28	Clutch-plate	6043	1	
Bras pr poulie des vitesses	29	Feed speed pulley bracket	6044	1	
Bras tendeur de chaîne droit	30	Chain-adjuster right	6045-1	1	
Bras tendeur de chaîne gauche	31	Chain-adjuster left	6045-2	2	
Bras de transmission	33	Clutch shifter	6046	1	
Guide du bas pour roue à main	34	Bottom guide for handwheel	6047	1	
Roue à main	35	Handwheel	6048	1	
Garde pour boîte à billes droit	36	Right bearing case guard	6049-1	1	
Garde pr boîte à billes gauche	37	Left bearing case guard	6049-2	1	
Collet	38	Collar	6050	2	
Garde chaîne intérieur droit	39	Chain guard inside right	6055	1	
Garde chaîne intérieur gauche	40	Chain guard inside left	6056	1	
Garde chaîne extérieur droit	41	Chain guard outside right	6057	1	
Garde chaîne extérieur gauche	42	Chain guard outside left	6058	1	
Garde poulie	43	Pulley guard	6059-1	1	
Garde poulie moteur et cylindre	44	Motor and cylinder pulley guard	6060-1	1	
Ressort pour embrayage	45	Spring for clutch	6061	1	
Crochet	46	Hook	6062	1	
Collet disque d'embrayage	47	Clutch-plate collar	6063	1	
Poulie 2 V 0	48	Pulley 2 V 0	6065	1	
Roue à chaîne 28 dents	50	Chain sprocket 28 teeth	6067	2	
Roue à chaîne 11 dents	51	Chain sprocket 11 teeth	6068	1	
Roue à chaîne 11 dents per.3/4"	52	Chain sprocket 11 teeth3/4"	6069	3	
Roue à chaîne 10 dents	53	Chain sprocket 10 teeth	6070-1	5	
Roue à chaîne 10 dents	54	Chain sprocket 10 teeth	6070-2	1	
Roue à chaîne 10 dents	55	Chain sprocket 10 teeth	6070-3	1	
Rouleau rainuré	56	Corrugated feed roller	6071	1	
Rouleau arrière haut	57	Upper back outfeed roller	6072	1	
Rouleau centre de la table	58	Center table roller	6073	2	

MODEL: 6000	# DESSIN DRAWING#	REV:	# PIECE PART #	QUANT.	
DESCRIPTION		DESCRIPTION			
Rouleau bout de la table	59	End table roller	6074	2	
Tige	60	Rod	6075	4	
Arbre pour roue à main	61	Handwheel shaft	6076	1	
Arbre de commande pr engrenage con.	62	Lifting table shaft	6077	1	
Vis pour table droite	63	Screw for right table	6080	1	
Vis pour table gauche	64	Screw for left table	6081	1	
Arbre pour tendeur	65	Shaft for chain binder	6082	5	
Arbre pour pivot de tendeur	66	Shaft for chain binder pivot	6083	3	
Arbre excentrique	67	Off center shaft	6084	1	
Pignon de commande 16 dents	68	Feed pinion gear 16 teeth	6085	1	
Arbre pour engrenage 98 dents	69	Shaft for gear 98 teeth	6086	1	
Goujon fileté pour garde (6")	70	Stud for guard (6")	6087	1	
Goujon fileté pour garde (4")	71	Stud for guard (4")	6088	1	
Goujon fileté pr garde (6 1/2")	72	Stud for guard (6 1/2")	6089	1	
Capuchon d'arrêt pr embrayage	73	Clutch stop knob	6090	1	
Ecrou hexagonal	74	Hexagon nut	6091	1	
Support pr bras de transmission	75	Bracket for clutch shifter	6092	1	
Crochet pr tension rouleau haut	76	Top rollers tension hook	6093	4	
Clef pour coulisse de la table	77	Woodruff key	6095	2	
Engrenage conique	78	Bevel gearing	6096	4	
Barre d'assemblage arrière haut	79	Top back assembly bar	6097	1	
Pignon	80	Pinion	6098	1	
Ecrou hexagonal gauche	81	Left hexagon nut	6099	1	
Ressort pour rouleaux du haut	82	Spring for upper rollers	6102	4	
Douille pour poulie du cylindre	83	Sleeve for cylinder pulley	6107	1	
Axe levier de commande	84	Control level axis	6109	1	
Support de roulement arr.gauche	85	Back left roller block	6110	1	
Support de roulement arr.droit	86	Back right roller block	6111	1	
Rondelle d'embrayage	87	Clutch washer	6116	1	
Boulon spécial de graissage	88	Grease fitting	6119	2	
Rail pour table	89	Table rail	6121	2	
Arbre roue à chaîne côté droit	90	Right side sprocket shaft	6124	1	
Espaceur	91	Spacer	6126	1	
Vis de graissage pr cylindre	92	Greasing screw for cylinder	6127	1	
Clef 3/16"x3/16"x3/4"	93	Key 3/16"x3/16"x3/4"	6128	4	
Capot de recouvrement	94	Gear box cover	6132	2	
Presse du cylindre	96	Cylinder press	6139	1	
Bloc support du moteur	97	Motor bracket block	4847	2	
Tige filetée	98	Stud	4859	2	
Collet de butée	99		4861	2	
Bride support de moteur	100	Motor support bracket	4873	2	
Barrure de porte	101	Door lock	4660	1	
Poulie 3 VA 3 1/2" (mot. haute vitesse)		Pulley 3 VA 3 1/2" (high speed motor)	4838-1	1	
Clef 3/16"x3/16"x1"	103	Key 3/16"x3/16"x1"	6140	7	
Rondelle plate fraisée	104	Flat washer	6141	8	
Aiguille indicatrice	106	Indicator	6142	1	
Table	107	Table	6004	1	
Poignée de fonte	108	Knob	501	1	
Poignée de fonte	109	Knob	101	1	
Poignée de fonte	110	Knob	101-B	1	
Poignée de fonte	111	Knob	502	1	
Poignée de fonte	112	Knob	302	1	
Plaque "POITRAS"		"POITRAS" name plate	1070-90	1	
Support de ressort	113	Spring support	6001	1	

MODEL:6000	# DESSIN DRAWING#	REV:	# PIECE PART #	QUANT.	
DESCRIPTION		DESCRIPTION			
Barrure d'embrayage	114	Shifter lock	6002	2	
Tige filetée3/8"-16 x 2 1/2"	115	Stud 3/8"-16 x 2 1/2"	6003	1	
Graisseur	V-1	Grease fitting	6002	6	
Graisseur	V-2	Grease fitting	6009	7	
Graisseur	V-3	Grease fitting	6011	5	
Coussinet à billes	V-4	Bearing	6206-ZZ	1	
Coussinet axial	V-7	Thrust bearing	FT-3/4"	2	
Vis tête creuse	V-9	Hex. hd cap screw	3/8"-16 x 2 1/4"	6	
" " "	V-10	" " " "	3/8"-16 x 1 1/4"	8	
" " "	V-11	" " " "	5/16"-18 x 1 1/2"	2	
" " "	V-12	" " " "	5/16"-18 x 1"	20	
" " "	V-13	" " " "	5/16"-18 x 1/2"	9	
" " "	V-14	" " " "	1/4"-20 x 1/2"	4	
	V-15	Carriage bolt	3/8"-16 x 2"	4	
Couteaux	V-16	Knives	12"	3	
Chaîne côté droit	V-17	Chain right side	44"	1	
Chaîne côté gauche	V-18	Chain left side	48"	1	
Fausse vis type "U"	V-19	Drive screw type "U"	4-1/4"	10	
Vis tête plate	V-20	Sock. flat hd mach.sc.	1/4"-20 x 1 1/2"	2	
Vis tête plate	V-21	Sock. flat hd mach.sc.	1/4"-20 x 3/4"	10	
Vis tête plate	V-22	Sock. flat hd mach.sc.	1/4"-20 x 5/8"	6	
Rondelle plate	V-23	Flat washer	1/2" sae	4	
Rondelle plate	V-24	Flat washer	7/16"sae	2	
Rondelle plate	V-25	Flat washer	3/8" sae	1	
Goujon rainuré	V-27	Groove pin	1/4"-2 1/4"	4	
Goujon rainuré	V-28	Groove pin	1/4"-1 1/4"	1	
Ecrou hexagonal	V-31	Hexagon nut	5/16"-18 N.C.	25	
Ecrou hexagonal	V-32	Hexagon nut	1/4"-20 N.C.	6	
Ecrou hexagonal	V-33	Hexagon nut	1/2"-13 N.C.	6	
Ecrou de blocage hexagonal	V-34	Hexagon locknut	7/16"-14 N.C.	8	
Vis tête creuse	V-35	Sock. hd cap screw	1/4"-28 x 1/2"	6	
Vis tête creuse	V-36	Sock. hd cap screw	3/8"-16 x 1 1/4"	2	
Vis de réglage	V-37	Socket set screw	3/8"-16 x 3/8"	1	
" " "	V-38	" " "	5/16"-18 x 1 1/2"	6	
" " "	V-39	" " "	5/16"-18 x 1 1/4"	2	
" " "	V-40	" " "	5/16"-18 x 1"	8	
" " "	V-41	" " "	5/16"-18 x 1/2"	6	
" " "	V-42	" " "	5/16"-18 x 3/8"	6	
" " "	V-43	" " "	5/16"-18 x 1/4"	13	
" " "	V-44	" " "	1/4"-20 x 2"	2	
" " "	V-46	" " "	1/4"-20 x 3/8"	5	
Anneau d'arrêt	V-48	Retaining ring	5100-118	1	
Anneau d'arrêt	V-49	Retaining ring	5000-244	1	
Plaque Jos Poitras	V-50	Jos Poitras label		1	
Plaque no de série	V-51	Serial number label		1	
Graduation	V-52	Graduation		1	
Rondelle de blocage	V-53	Lock washer	3/8"	10	
Maille patente	V-54	Chain link		2	
Bague	V-55	Bushing	5/8" x 3/4" x 11/4	1	
Bague	V-56	Bushing	5/8" x 3/4" x 5/8"	5	

MODEL: 6000

DESCRIPTION	# DESSIN DRAWING#	DESCRIPTION	# PIECE PART #	QUANT.	
Bague	V-57	Bushing	3/4" x 7/8" x 1"	2	
Bague	V-58	Bushing	3/4" x 7/8" x 5/8'	3	
Vis tête ronde	V-61	Sock. round hd mach. sc	.1/4"-20 x 5/8"	6	
Vis tête ronde	V-62	Sock round hd mach. sc	10-24 x 1/2"	4	
Vis tête creuse	V-63	Sock. hd cap screw	3/8"-16 x 1"	1	
Vis tête ronde	V-64	Sock round hd mach. sc	10-24 x 1"	1	
Vis de réglage	V-66	Socket set screw	5/16"-18 x 1/2"	12	
Ressort	V-68	Spring	3/8" x 1 1/4"	2	
Ressort	V-69	Spring	5/8" x 4 1/2"	2	
Ressort	V-70	Spring	5/8" x 2 7/8"	1	
Courroie(moteur basse vitesse	V-74	Belt (low speed motor)	A-73	3	
Courroie(moteur haute vitesse		Belt (high speed motor	A-68	3	
Courroie en "O" 3/8" X 37"	V-75	Belt "O" 3/8" X 37"	3/8" X 37"		
Rondelle plate	V-76	Plain washer	1/4" sae	1	
Graisseur	V-83	Grease fitting	6013	3	
Vis tête creuse	V-84	Sock. hd cap screw	5/16"-18 x 2 3/4"	1	
Tige filetée	V-85	Stud	5/16"-18 x 1 1/4"	1	
Goujon rainuré	V-88	Groove pin	3/16" x 1 1/4"	2	
Ecrou hexagonal	V-89	Hexagon nut	3/8"-16 N.C.	4	
Coussinet extérieur	V-90	Bearing torr. ext.	JTT-1212	1	
Coussinet intérieur	V-91	Bearing torr. int.	IR-812	1	
Ecrou hexagonal	V-92	Hexagon nut	5/8"-11 N.C.	1	
Ecrou hexagonal	V-93	Hexagon nut	10- 24 N.C.	1	
Tige filetée	V-94	Stud	3/8"-16 x 1"	1	
Clef hexagonale		Hexagon key	5/32"	1	
Clef hexagonale		Hexagon key	3/8"	1	
Clef ouverte		Open key	5/16"	1	
Coussinet à billes	V-95	Bearing	6205-2RS	2	
Courroie en "V"	V-96	V-Belt	3L 390	1	
Vis tête creuse	V-97	Sock. head cap screw	1/4" - 20 X 1/2"	2	
Vis tête plate	V-98	Sock. flat hd. mach. sw	1/4" - 20 X 2 1/2"	2	
Rivet pop	V-99	Pop rivet	AD - 610 - BS	4	
Buse d'aspiration	V-100	Dust Hood	6143		

Raboteuse
Surface Planer

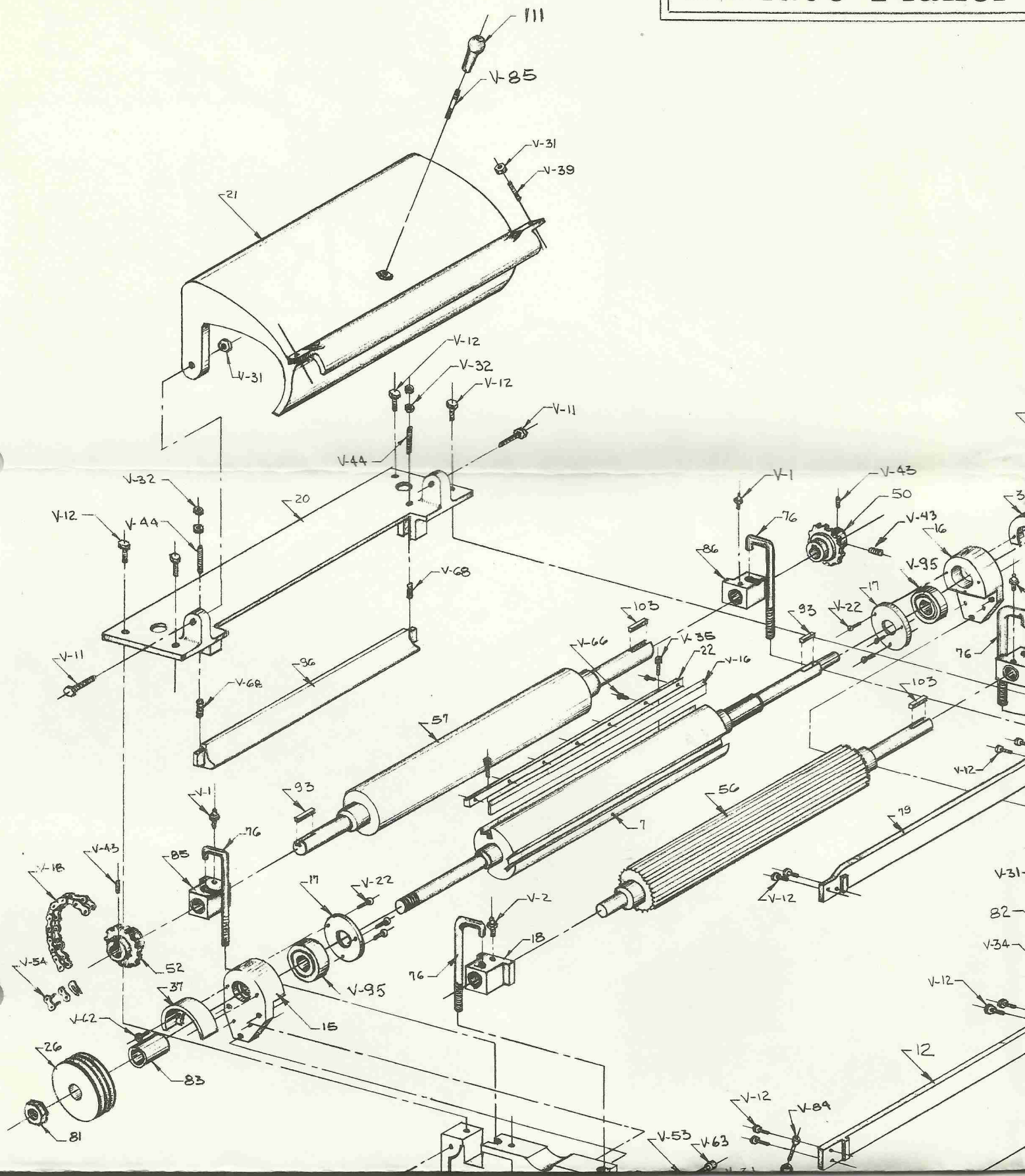

6000

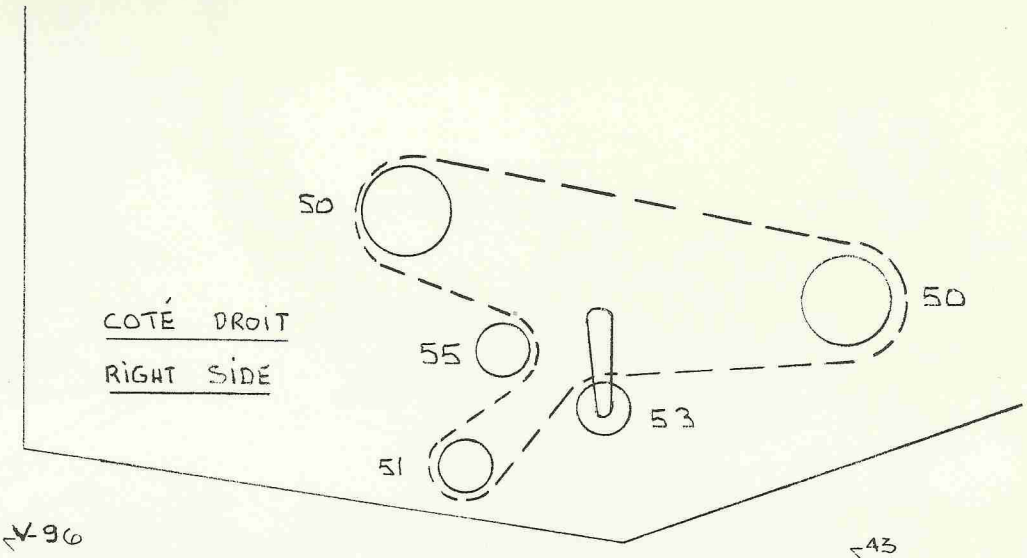

COTÉ DROIT

RIGHT SIDE

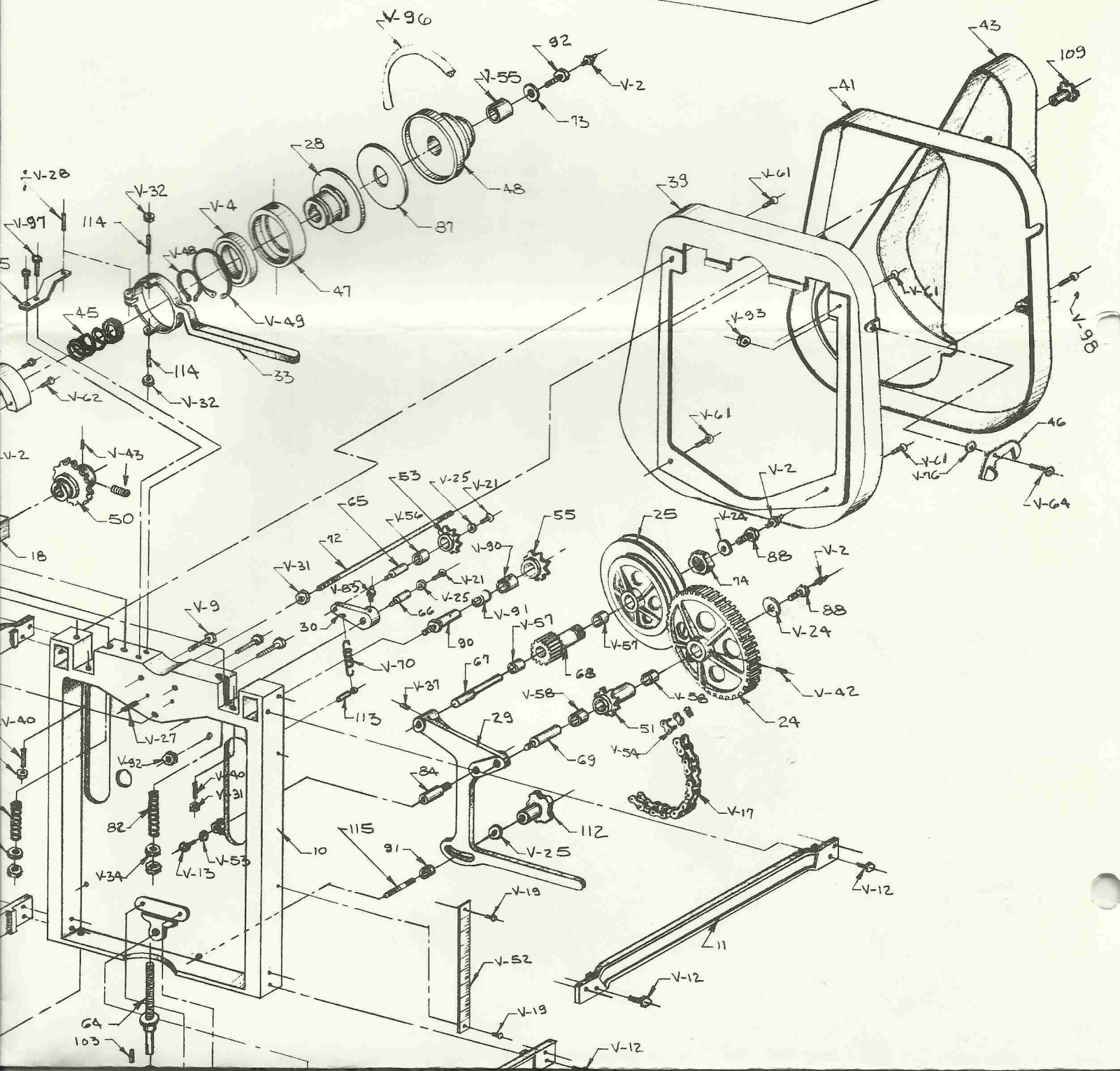

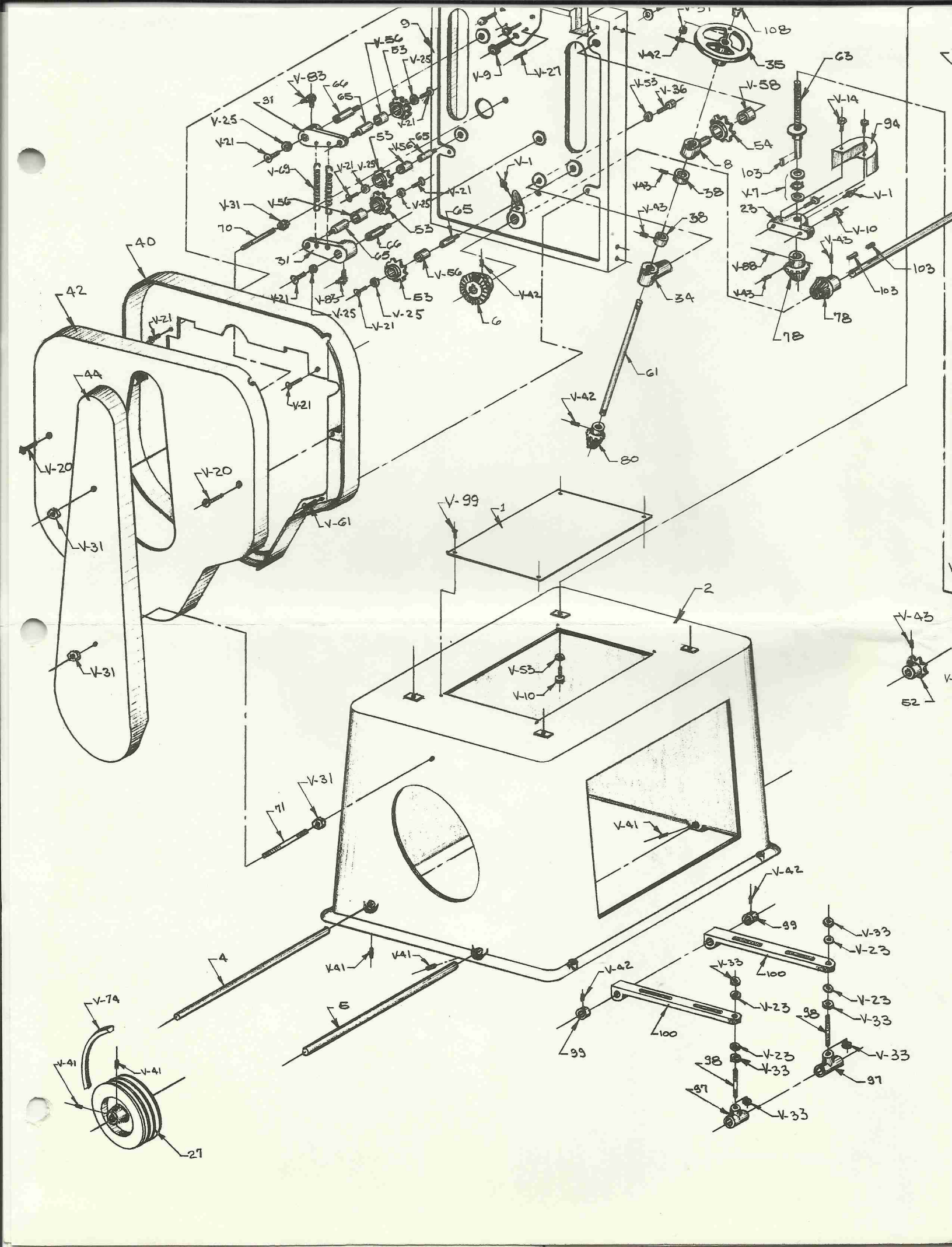

9
V-56
53
V-25
V-83
66
65
31
V-25
V-21
V-21
53
V-56
65
V-69
V-21
V-25
V-21
V-31
V-56
V-25
70
53
66
65
31
V-21
V-83
V-25
V-25
V-21
53
V-56
V-42
6
V-9
V-27
V-1
V-42
108
35
V-53
V-36
V-58
63
V-14
94
54
8
103
V-7
V-1
V-43
38
V-43
38
23
V-10
V-43
V-88
V-43
103
103
34
78
78
61
V-42
80
40
42
V-21
44
V-21
V-20
V-20
V-31
V-61
V-31
V-99
1
2
V-53
V-10
V-43
52
V-31
71
V-41
V-42
99
V-33
V-23
100
4
V-41
V-41
5
V-42
V-33
V-23
V-23
V-33
98
100
99
V-23
V-33
98
V-33
97
97
V-33
V-74
V-41
V-41
27

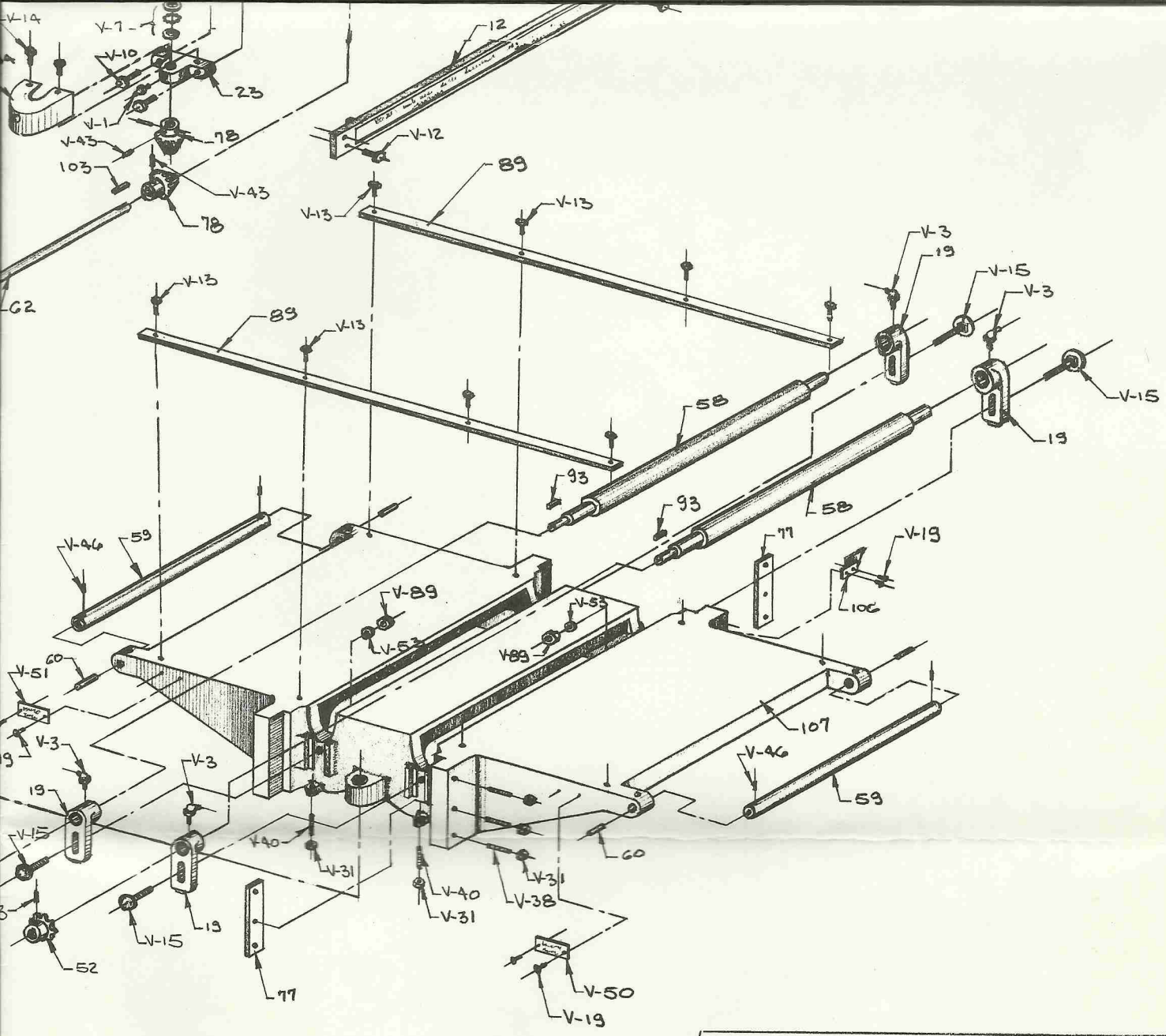

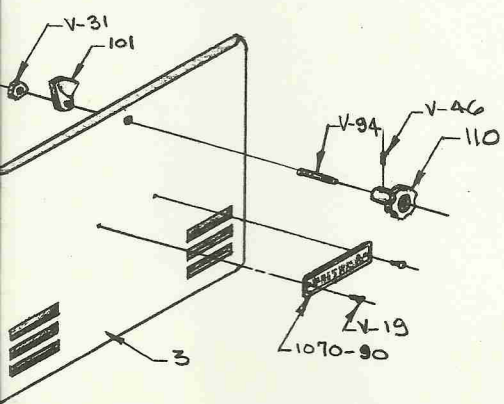

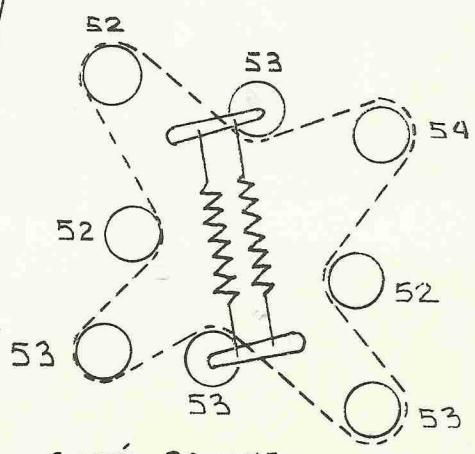

COTÉ GAUCHE
LEFT SIDE