"Every User Is a Booster"

"Oliver" No. 25. Motor-Head Pattern Makers' Wood Turning Lathe

With the New "Sliding Control"

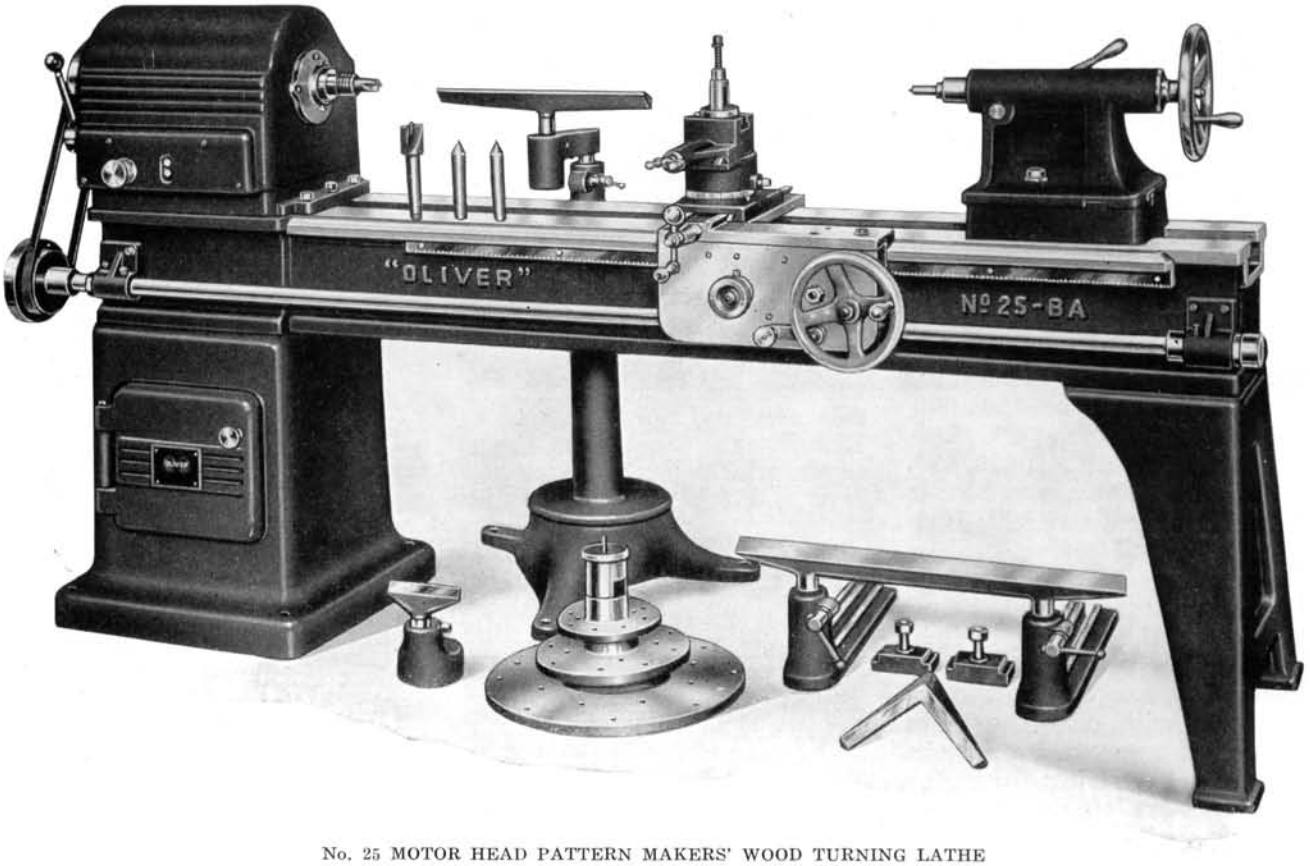

No. 25 MOTOR HEAD PATTERN MAKERS' WOOD TURNING LATHE

Made in three sizes to swing 16, 20 and 24-inch.
Particularly suitable for alternating current motors.
Can be furnished for D.C. by special arrangement.

"Oliver" Pattern Makers' Lathes
Are Famous the World Around!

Unique New Type "Sliding Control"

To eliminate the evils of the old drum type control, an entirely new principle is used. The stationary plate carries permanently contact plugs which are fastened to all the motor wires. A sliding plate carries spring loaded contact plugs which are connected to the control switch and the power lines. All power is shut off from the controller while the convenient handwheel locates the sliding plate at any one of the four speeds desired.

Manufactured by

Oliver Machinery Co.

Grand Rapids, Michigan, U. S. A.

BRANCH SALES OFFICES:

New York, St. Louis, Minneapolis, Los Angeles, San Francisco, Chicago, Denver, Salt Lake City, Seattle, Manchester, Eng.

"Sliding Control" Motor Head

This headstock is the culmination of many years of experience in manufacturing and constantly improving motor headstock wood turning Lathes. The Oliver Machinery Co. was the first to produce a motor headstock lathe. That was back in the year 1906. From that date on, various improvements have been made. The very latest, most improved and most modern headstock is the "Oliver Sliding Control" type, for two or three phase, 60 cycle, 220 or 440 volts Alternating Current. It has four speeds, either 600, 1200, 1800 and 3600 r.p.m., or 450, 600, 900 and 1800 r.p.m., 600, 900, 1200 and 1800 r.p.m.; 450, 900, 1200 and 1800 r.p.m. It is totally enclosed, air-tight, dust-proof, Roller Bearing, and of the unit type. This is the type in which the motor, the control apparatus, the starting switch, and the low voltage and overload relay are all built-in as one unit with only the main line wires emanating from the motor; so that, when the motor headstock is clamped on to the lathe bed, it is complete and sufficient in itself and will operate immediately upon connecting the line wires. Indeed this unit can be removed from the lathe bed, placed on a wooden table and actually run, because all of its electric and mechanical parts are self-contained. This is a decided improvement over the ordinary type of lathe in which the motor is separate from the control or starting parts, the starting and control apparatus are mounted in the leg of the machine and have many wires to run through the bed. All four windings are protected by separate relays against overload. Relays are resetable by push buttons in rear of headstock.

Very Compact

The new "Oliver Sliding Control" headstock is very compact; it measures 18" from the bottom to the top of the motor, thus making it just as low as possible. It is well rounded at the top and at the front. There are no protruding parts above the motor unit itself. The entire control apparatus is built in as a unit; the major parts are located back of the motor, and the operating parts are built in at the front towards the bottom of the motor.

Dual Contactors

The following simple procedure demonstrates the proper use and many advantages of this new and novel headstock. Remove the cast iron back cover which has a machined face and fits the back of the motor in a manner so as to make it entirely dust-proof. Now note where the three main line wires for three phase, or the four main line wires for two phase current have to be connected at the top of the control contactor. These are marked L-1, L-2, L-3, and L-4, (the last in connection with two phase only). For three phase current connect your main line wires to L-1, L-2, and L-3. Note that in this control apparatus there are two magnetic contactors — one we will call the Master Contactor, and the other the Control Contactor.

Starting and Stopping

Having connected the main line wires, next make sure that the hand knob at the front of the motor head is located so that the lowest speed position lines up with the locating mark. If it does not line up with the same, pull out this hand knob as far as it will come out and then turn as far to the left as it will go. You will then find that the lowest speed mark will line up with the locating mark. In that position push the start button directly to the right of the hand knob. You will note that (pushing this start button) both the master contactor and the control contactor in the rear of the motor will at once be put in action because both magnets that control these contactors will be magnitized and both close instantly and the motor will start at once to run at the lowest speed. If it is desired to stop without putting on the brake, push in the stop button and at once the current will be shut off from both contactors and the motor will soon coast down to a dead stop. If, however, you want to stop very quickly, then instead of pushing in the stop button, get hold of the brake lever and pull the lower end as far forward as possible. This will automatically shut off the electric current from the entire motor and will put on the brake.

Brake and Spindle Lock

This consists of a shoe lined with ordinary brake lining operating on the periphery of the brake drum which is mounted inside of the motor near the left or outside end. This brake drum is keyed on to the spindle and is also the medium for locking the spindle when a face plate is either tightened on or removed. The locking operation is performed by pushing in the locking button at the left end of the motor directly above the bearing. This locking arrangement is superior to any other locking arrangement. The locking button is of the self-ejecting type, therefore it cannot possibly be inadvertently left in the locking position.

Changing Speeds

Assuming that the speed control hand knob is at the low speed position, the motor is started by pushing the start button, thus closing the master

contactor and the control contactor. Let us consider how to change from one speed to the other. Pull out the control hand knob as far out as it will go so as to disengage itself from a pin which engages this hand knob at any of the four specific speed positions. Having pulled the hand knob out, turn it towards the right until the next mark coincides and then release the hand knob and you will find that the speed will automatically change from the lowest to the next higher speed. By repeating, pulling the hand knob out and turning it to the right or to the left to the desired speed location, and then releasing the hand knob, the motor will run at the speed selected. Every time you pull the hand knob out, the current is shut off from the control contactor, but the master contactor in the rear of the machine stays in its closed position.

Non-Arcing Contact

This feature is a very important one, because when you pull the hand knob out you automatically shut off the current from the speed changing control apparatus, so that when you are turning the hand knob and moving the controller to any other speed, no electric current is flowing through the control mechanism; consequently there is positively no arcing whatever between the contact points of the controller as you change from one speed to another. All controllers that are now offered by all other makers of motor headstocks, are of the revolving drum type, and as such, cannot help arcing when the contact fingers engage or disengage the contact plugs as the controlling is revolved to bring the various poles in action.

No Single-Phasing

Another specific danger of the drum type controller is that the operator inadvertently may locate the drum controller in the so-called neutral or half-way point between any two speeds and thus stop the spindle from revolving, yet have the current flowing through the motor and the control apparatus. This is commonly called Single-Phasing. The new "Oliver Sliding Control" eliminates this danger because unless the control hand knob actually engages the control mechanism in any one of the four specific points so as to have the spindle running at any one of these speeds, the electric current is automatically cut off from the entire motor. To demonstrate this feature while you are changing from one speed to another allow the hand knob to recede at any point in between any two speeds and you will find that this will automatically cut off all current by pushing in the pin which would normally fall in any one of the four holes back of the hand knob when the speed locations are correctly placed; but in between any one of these speeds if the hand knob is allowed to recede, this pin is pushed back and the electric current is automatically shut off, eliminating any mishap to either the motor or the controller. We spent many hours in bringing about this specific design, which gives us the only motor headstock wherein either the motor is actually running or the current is entirely shut off.

Speed Changed Quickly

In operating the "Oliver Sliding Control," it is not necessary to take these speeds one at a time. You can jump from any of the lower speeds to any of the higher speeds, or vice-versa, and you will soon learn that the farthest to the left location is the lowest speed location, and that the farthest to the right location is the highest speed location, so that you can get either of these speeds almost with your eyes shut, but on the other two, you must get the locating marks approximately coinciding before the hand knob is released. In each of the speed locations that the hand knob is released, you will find that you cannot turn this hand knob one way or the other because there is a pin that engages it. This is a very good safety feature because it makes it difficult for anyone to mischievously increase or decrease the speed while someone else is turning work on the machine.

Sliding Control

Let us examine the "Sliding Control" apparatus in the back of the motor. You will find that there is a front sliding plate which is built of two sections of micarta and has a steel rail both at the top and below it. Between these plates are springs located one for each contact plug, so that every plug in this sliding section is "spring loaded" to assure perfect contact. This plate slides from one location to another by means of a rack directly under it, which rack is propelled by a pinion on the shaft that runs from the rear to the front where it is fastened to the control hand knob. In order to completely demonstrate the workings of this part, we suggest that you remove the rod at the top of the double sliding contact plate and pull out the slide plate without any necessity of disengaging any of the electric wires. You will then see exactly how the rack engages the small pinion and how all of the wires from the motor terminate in the back of the

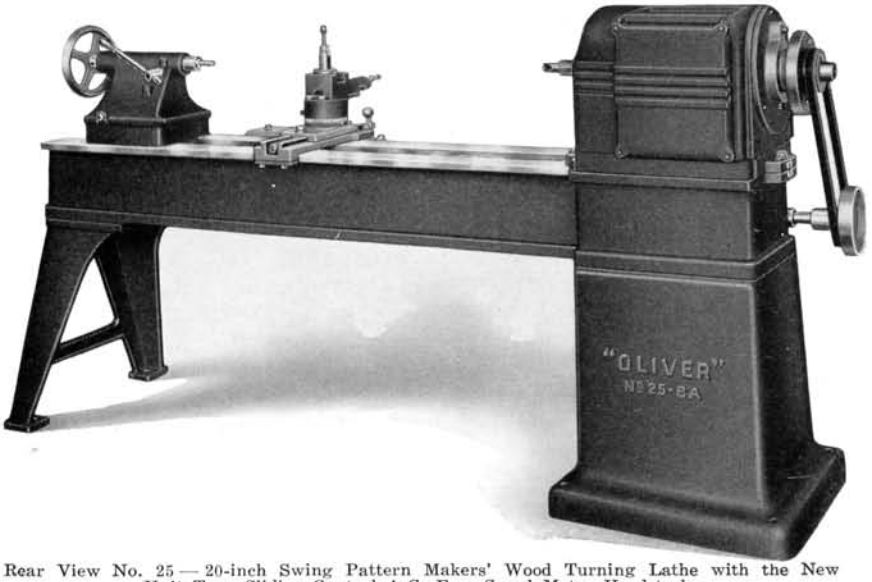

Rear View No. 25 — 20-inch Swing Pattern Makers' Wood Turning Lathe with the New Unit Type Sliding-Control A.C. Four-Speed Motor Headstock.

stationary contact plate, which also is made of micarta. In this plate are located all of the stationary plugs on the rear of which the wires are permanently fastened. To relocate the sliding contact plate, first turn the front hand knob to the slowest speed location, and then as you stand back of the motor hold the sliding plate as far to the right or outside end of the motor as possible and then lower it down so that the rack may be in proper mesh with the pinion. This will be correct then for the low speed location, and all other locations will register correctly.

Automatic Switching

Look at the inside of the switching mechanism after removing the front lower cover. You will see just exactly how the brake handle shuts off the current before applying the brake. You will also notice just how the protruding pin back of the hand knob engages in the holes when the hand knob is properly located and how at any in-between location the current is automatically shut off. You will observe that what is ordinarily the stop button is also the reset button. In other words, should this motor be overloaded for any reason then the overload relays will automatically shut off the current and stop the motor without any harm to the motor whatever, exactly the same as separate fuses would have done. In order to start the motor again all one needs to do is to push the combined stop and reset button all the way in. To merely shut off the current you need to push this button only part way, but to reset you must push it all the way in because then the conical end will operate the reset mechanism.

Electrical Parts Standard

All of the switches, contactors and other electrical parts are standard Cutler-Hammer and General Electric parts, but the two "sliding control" plates are manufactured by ourselves, they are patented by us, we are the only ones that can manufacture a controller of that type. It is far superior to any other make. The contact plugs are brass with double coating of chromium plating to insure against corrosion, and to maintain shining bright contact surfaces at all times.

Effective Brake

The brake lever located in the outside end bell, has ample power to stop the motor, even from its highest speed, within a very few seconds. We do not believe in instant, forced quick stopping of the spindle, which may destroy the work that is on the machine. A more gentle stop which, after all, does not take more than two or three seconds, is far better. Another important feature of our brake is the fact that it is self-adjusting; positively no adjustments are needed during the life of the brake lining, which is made of material that will last several years, and then is easily replaceable locally.

Head Spindle

Of special high carbon steel, large in diameter, threaded at front end to receive face plates and at rear end has a large flange shrunk on the spindle and finished all over to receive the large face plates which are held securely by four stud bolts. This method of holding rear end face plates is used on "Oliver" Lathes only; it saves time and avoids face plates getting "stuck." Spindle has hole through it to assist in removing centers, is accurately ground and absolutely true in the journals.

Spindle Bearings and Cones

All head stocks are provided with Taper roller bearings, adjustable to wear, and are fitted for grease lubrication.

End Thrust

Is taken care of by means of a thrust nut threaded to the spindle, taking up any play that may develop in the taper roller bearings.

Tail Stock

Constructed in the open side design. Cutting tools may be brought close to centers. Has set-over device for turning taper work and an eccentric lever for locking it in any desired position. Tail spindle is of correct diameter bored to Morse tapers. Is held in position by means of a strong clamp. The tail center may be removed by simply backing the screw.

The Bed

It is of iron of proportionate dimensions to suit the size of the lathe fitted to it. It can be supplied in any length, calculating by advances of two feet, but 8 and 10-foot beds are standard. It has a broad top, made flat so the operator's tools will not work off. When furnished to receive a tool carriage the ways for same are cast to the side.

Power Feeding Carriage

All sizes of lathes may be provided with a power feeding carriage, when so ordered. The carriage receives its power through a belt from a two-step cone on the lathe spindle to a cone on a feed shaft the length of the bed, giving two speeds to the feed shaft. When using the lathe at the overhanging end for the face turning on large diameters the cone pulley may be instantly removed.

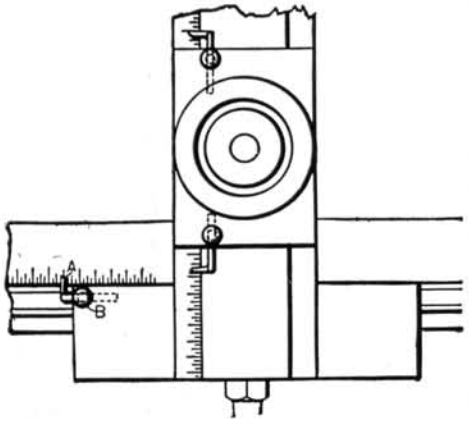

Carriage Graduation.

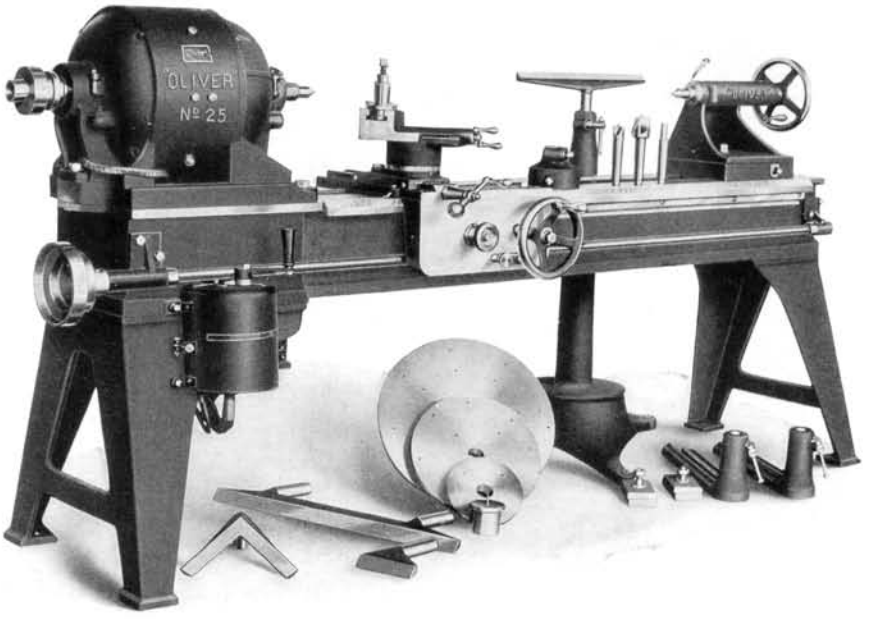

No. 25-B MOTOR HEAD PATTERN LATHE—20-INCH—FOR DIRECT CURRENT
Can be furnished with either power feeding carriage as shown or Hand Feeding and with pushbutton magnetic starter.

Carriage Graduations

Are placed on the machine to enable an operator to turn a definite length or depth without having to "fit and try." They are located on the top of the bed at the front and on the ways for the carriage cross slide. "A" is a finger adjustably set in the carriage slide and clamped by means of a screw "B."

Special Hand Rest Sockets

This device provides an effective hand tool rest mounted on the cross slide of the carriage. It consists of a rest socket machined to fit the slide and held firmly.

Hand Feeding Carriage

It is furnished with any size of machine. Is correctly proportioned and constructed with a compound swivel rest. The apron has a wide support on the front side of bed. A hand wheel engages steel cut rack and pinion and operates freely in either direction.

D.C. Motor Head

This consists of an "Oliver" fully enclosed, variable speed, direct current, 2 h.p. motor of improved multi-polar type, having commutating interpoles. The speed varies from 400 to 2000 r.p.m.

Motor Details (D.C.)

The frame is made of soft cast steel and fully encloses all current carrying parts. Upper cover on the commutator end removable for inspecting brushes. Main poles consist of sheet steel laminations riveted together. Interpoles are cut from solid steel bar. Field coils are form wound and thoroughly insulated. Bearings are grease lubricated ball bearing type. Commutator bars are made of hard drawn copper, insulated from the commutator center and from each other by selected mica. Commutator uses two brushes per stub, eliminating brush trouble and sparking. Armature is mounted on a special shaft constituting the head stock spindle. The core is built up of laminae of soft steel sheet heavily insulated before the coils are wound into place.

NO. 25 MOTOR-HEAD PATTERN MAKERS' WOOD TURNING LATHE

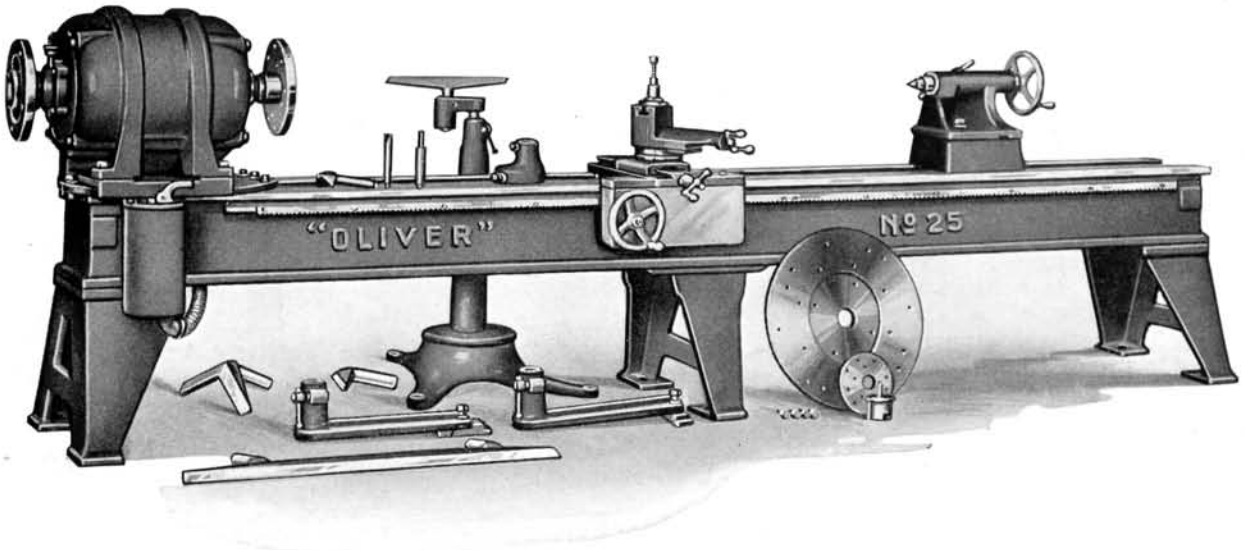

No. 25 24-INCH "OLIVER" PATTERN MAKERS' MOTOR HEAD WOOD LATHE WITH 14-FOOT BED
Note the Hand Feeding Carriage. Separate Drum Type Controller and the Extra Leg.

GENERAL DIMENSIONS

HEAD STOCK

Swing in Inches	16″	20″	24″
Diameter of Spindle Nose	1⅞″	1⅞″	1⅞″
Diameter of Front Spindle Bearing Seat	2⅛″	2⅛″	2⅛″
Diameter of Rear Spindle Bearing Seat	2¾″	2¾″	2¾″
Size of Morse Taper by No.	2	4	4
H.P. of Motor Head	2	2–3	3
H.P. of D.C. Motor Head	2	2	2
Spindle Speeds D.C.	400 to 2000	400 to 2000	400 to 2000

A.C. Motor Head obtainable, four types:

2 or 3 H.P. — 4 speeds = 600, 900, 1200, 1800 R.P.M.
4 speeds = 600, 1200, 1800, 3600 R.P.M.
2 H.P. only — 4 speeds = 450, 900, 1200, 1800 R.P.M.
4 speeds = 450, 600, 900, 1800 R.P.M.

TAIL STOCK

Swing in Inches	16″	20″	24″
Diameter of Spindle	1½″	1⅞″	1⅞″
Traverse of Spindle	4½″	6″	6″
Length of Spindle Bearings	10¼″	12″	12″
Size of Morse Taper by No.	2	4	4
Adjusting Screw—No. Threads to Inch	8	6	6

HORSE POWER

Swing in Inches	16″	20″	24″
H.P. Recommended	2	2–3	3

BED

Swing in Inches	16″	20″	24″
Standard Length in Feet	8′	8′	10′
Width Inside of the Carriage Way	9½″	11¾″	15¼″
Depth	7″	9¾″	11″
Height from Floor	34″	35″	30″

CARRIAGE

Swing in Inches	16″	20″	24″
Traverse of Cross Feed	8″	11″	13″
Traverse of Compound Feed	5″	6″	7″
Travel of Carriage on the Standard Length of Bed	5′ 3″	4′ 7″	6′ 3″
Length of Way Bearing	17″	17″	20″
Length of Slot in Tool Post	2″	2″	2″
Width of Slot in Tool Post	¾″	¾″	¾″

EQUIPMENT

Swing in Inches	16″	20″	24″
Single Shank Rests, Length	6&18″	6&18″	6&18″
Double Shank Rests, Length	30″	30″	48″
Rest Holders, Quantity	two	two	two
Head (Spurs) Centers, Sizes	¾ &1¼″	¾ &1¼″	1¼ &2″
Tail (Cup) Centers, Sizes	¾″	¾″	¾″
Conical Centers	pair	pair	pair
Front Face Plates, Diam.	8&12″	8&12″	8&12″
Rear Face Plates, Diameter	20″	20″	24″
Screw (Rosette) Chuck, Dia.	3½″	3½″	3½″
Right Angle Rest, Size	6″	6″	6″
Floor Stand with Off-Set Rest Holder	one	one	one
Hand Tool Rest Holder for use on Carriage	one	one	one

CODE, CAPACITY, WEIGHT, ETC.

CODE	DESCRIPTION	Swing Over Bed	Swing Over Carriage	Swing at Rear End	Length Stand. Bed	Turns Bet. Centers	Weight in Lbs. Crated	Weight in Lbs. Boxed	Cu. Ft.
Duff	No. 25-A Lathe with Hand Feeding Carriage	16″	13″	84″	8′	61″	2000	2280	98
Dug	No. 25-B Lathe with Hand Feeding Carriage	20″	17″	84″	8′	54″	2700	3000	120
Dugic	No. 25-C Lathe with Hand Feeding Carriage	24″	20″	84″	10′	72″	3200	3600	136

NOTE — Power Feeding Carriage may be furnished instead of the regular hand feeding when so ordered. Bed lengths may be increased or diminished from the standard 2-ft. lengths.