GENERAL

OPERATING AND MAINTENANCE INSTRUCTIONS FOR 250 10" TILTING ARBOR SAW

A circular saw requires a reasonable amount of care and attention to insure perfect performance and accurate work, because no matter how good the manufacturer makes the machine, the operator must take reasonable care of it, if it is to continue to give the best result. It will take just a few moments to read and familiarize yourself with these instructions and they will probably save you a lot of trouble and time.

INSTALLATION

Your Tilting Arbor Saw is shipped in a crate and wrapped in waterproof paper. Remove the crate and bolts that hold it to the crate and take away the paper. The motor pulley is attached to the bottom of the crate inside the cabinet and the belts are attached to the left handwheel. The surface of the table, fence and outside mechanisms have been covered with a special grease to prevent rusting. Remove this grease, but solvent should not be used for this purpose.

Your saw is now ready to be put in its place and to receive the motor. Your saw is sufficiently heavy that it need not be bolted to the floor. However if it is desired to fasten the saw to the floor, care should be taken in doing so. Almost all floor are not exactly level and one leg will probably have to be shimed, so your machine will not be thrown out of true when tightening to the floor. We recommend that pieces of flat rubber about 3/16 inch thick by 4 inches square be placed under each leg, whether bolted or not. This will prevent any slight uneveness in the floor from twisting the table and spoiling the adjustment of the saw. This procedure is of the utmost importance to keep the exactness of your saw.

Power required

For light work in the small shop or home workshop ¾ H. P. repulsion-induction motor will be sufficient. For average and steady production a 1 H. P. repulsion-induction motor is recommended.

Speed

The arbor saw is shipped in three different pulleys and belts set up for use with three different motor speed. The standard machine is equipped with 5½ inch diameter pulley and V-belts for 1725 R. P. M. motor. When stated with order the machine is shipped with a 3 inch pulley and V-belts for 3600 R. P. M. motor or with 5½ inch diameter pulley and V-belts but with a smaller arbor pulley for 1450 R. P. M. motor. This should be noted and checked carefully so as to install the right motor to obtain the recommended saw blade speed of 3600 R. P. M. Be sure that the motor runs in the right direction. The teeth of the blade must move toward the front of the machine, if not reverse the rotation of the motor according to the instructions with it.

Installing the motor

If the motor is obtained from us which we strongly recommend for minimum trouble, do as follows : place the pulley on the motor shaft and tighten in place, the hub should be flush with the end of the motor shaft. Remove the motor plate that is screwed on the arbor bracket of the machine. Fasten the plate to the motor by the holes provided. Then tilt the saw slightly and place one V-belt on the arbor pulley. The other belt should be placed on the motor pulley. The motor should be brought in place and the innermost belt put in place, then put one screw to hold the motor to the bracket. The other belt should now be put in place. Screw the 3 other screws and adjust the tension. The belts should not be too tight. Then fasten in place. There should be ⅛ inch clearance between the motor shaft and the elevating shaft. The motor is now ready to be connected to the switch. The switch is usually placed on the right

side corner of the machine. Single phase switch can be fasten with the panel screw.

When the motor is supplied locally care should be taken that our recommendation in choosing the motor is followed closely. The largest motor that can be placed is a Nema Frame motor #205. We are furnishing a recommendation sheet of motors and a mounting print to your dealer. These should be studied closely. The dimension "A" on the print is very important and should not be any longer. If "A" is longer the surplus should be cut off, before trying to install the motor. The motor plate is drilled and tapped for Nema frame no. 203 and no. 204. If a larger or a smaller frame motor is used, new holes will have to be drilled and tapped. Care should be taken so that the dimension "A" is not exceeded. Then proceed as outline above. Sometimes the connection box will prevent the saw from cutting to its full thickness, in such case it should be cut to permit the saw to be raised, to cut to its full thickness of 3⅛ inch. The saw blade should now be raised, lowered and tilted to be sure that all its movements are free.

As the average motor is opened to admit air for cooling, it will have to be cleaned periodically as dust will accumulate inside and prevent the proper functioning of your motor. This is done by using compressed air or a hand bellow to blow the dust cut.

Your Tilting Arbor Saw leaves the factory completely adjusted and ready to operate, however a check up is recommended both to familiarize yourself with it and to be sure that everything is in order.

The front handwheel is used to raise or to lower the saw blade. The saw blade will lower flush with the table and can be raised to a maximum of 3⅛ inch above the table. Stop are provided to limit this travel. This is fixed at the factory and cannot be changed. The left handwheel is used to tilt the saw blade from 90° to 45°. The saw blade should be placed at 90° and the stop screw adjusted. This is done through the motor opening, by screwing the stop screw up or down and locking in place with lock nut on the piece no. 3. The pointer should be adjusted at 0. Your scale will now give the right reading. Tilt the saw blade to 45° and adjust the stop, proceeding in the same manner as above.

Fence

The fence travels the full width of the table, when it is unlocked at both ends. The guide should be paralled with the saw blade. This is adjusted by loosening the two cap screws on the underside of the fence bracket, adjusting the fence and tightening again. The pointer should be placed at 0 on the guide bar when the fence slightly touches the saw blade.

To use proceed as follows: The fence should be loosened at both ends by the handknobs #35 and thumb nut #46, brought by hand to the approximate setting, then pulling back knob #36 so the gear pinion will engage the rack on the underside of the guide bar and adjusting to the exact width. This handknob is provided to facilitate fine adjustments. The fence should then be locked in place at both ends. Always lock both ends of fence.

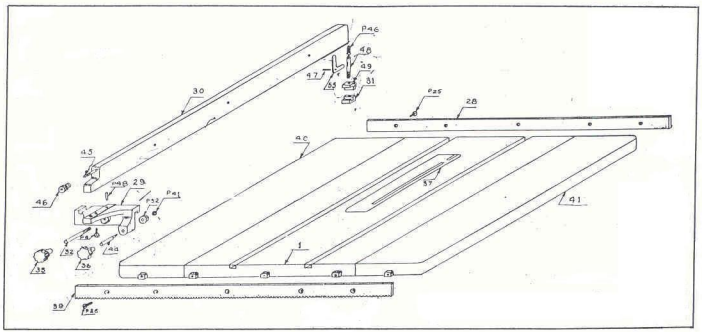

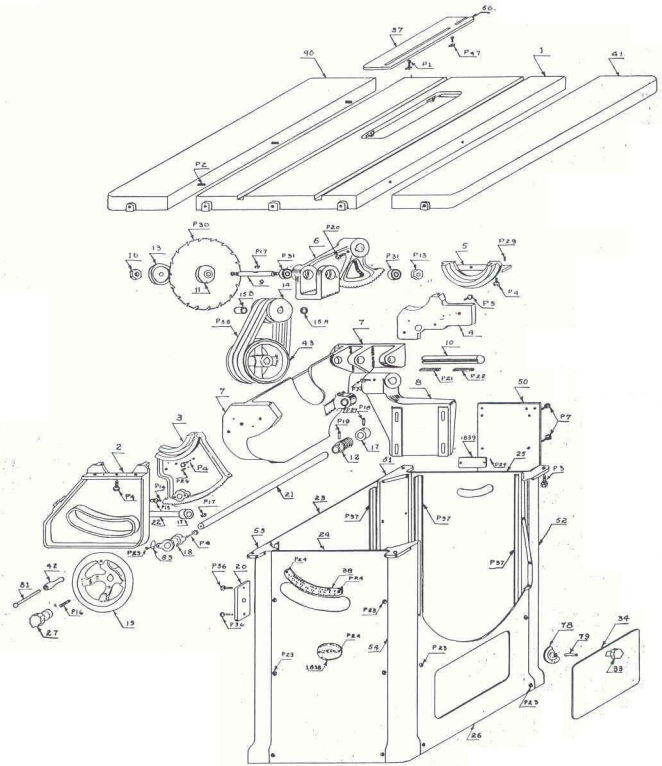

60
37
P47
P1
40
1
41
P2
P30
P20
6
P29
10
13
P17
P31
P31
P13
5
11
9
14
P4
15B
15A
P5
P38
4
7
43
10
P21
P22
8
50
7
P18
P19
P7
3
17
12
1839
25
2
P4
P25
P3
P4
P16
P17
21
23
P37
P37
52
22
17
P8
53
24
P23
83
18
P37
42
P56
20
P24
38
P24
81
P16
19
P23
27
P36
P24
54
P23
78
79
34
33
P23
26

The front guide bar is graduated in ⅛ of an inch for your convenience in setting your width of cut by eliminating the use of a rule especially when the motor is running. The fence should be moved a few inches from the saw blade before tilting because if it is too near the saw blade will strike it, damaging both your saw and fence. As the machine is furnished with side extensions making the table 30 inches deep x 36 inches wide, panel 36" wide can be cut in half. Guide bars to cut to the center of 48" panels can be furnished.

Miter Gauge

This gauge will enable you to cross cut at 90° or at any angle desired, from 90° to 30° right or left. It is operated by loosening the hand knob and drawing the plunger back, after setting to the angle desired, the knob is tightened. Care should be taken not to use the miter gauge in the right slot when the saw is tilted as it will not clear the blade.

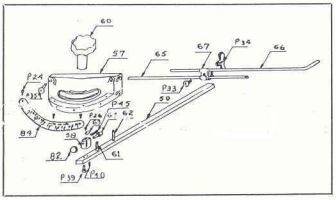

Blade

To change saw blade, the table insert should be removed, this is done by pressing on the rear part to raise it. Raise the saw blade, a few inches above table then use a block of wood to hold the blade from turning, loosen the nut with a wrench by turning in the same direction as the saw cuts and remove flange and saw. To replace a saw the above operation is reversed. Be sure that the flanges, saw, and nut are clean of dust when putting back in place. Never strike on the nut to loosen or tighten as this will damage your machine. The General Tilting Arbor Saw uses ripping saw, combination saw, or cross cutting saw 10 inches in diameter with holes ⅝ inch in diameter. Always keep saw sharp, and well set, dull saws require more power and do not give as satisfactory work.

Guard

The Guard gives complete protection from the saw blade at all times when ripping or cross-cutting. It must

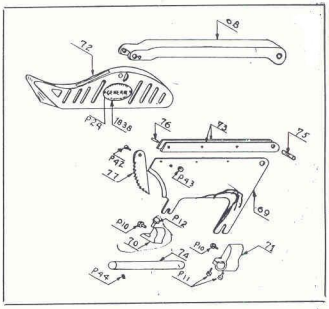

be removed for dadoing or when using a moulding head. To install proceed as follows :

The part #74 is placed in the hole in part #4 and locked with screw provided. The bracket #70 is then placed on part #7 and bracket #71 is placed on part #74. The guard is then placed on these brackets and screwed tight. After the guard splitter is adjusted in line with the saw blade, the brackets are tightened in place. To remove for dadoing, or for moulding the two screws holding the Guard Splitter to the brackets are loosen and the guard is removed.

Dadoing and moulding

When dado cutters or a moulding head is used a special insert #2549 must be used. This will permit the use of dado cutters or moulding heads up to 13/16 inch wide. The loose flange is not used with these cutters. A parallel piece of wood should be screwed to the fence by holes provided when doing dado or moulding work. This will protect your fence and your cutters when doing certain type of work.

Lubrication

The ball bearings of the arbor spindle are greased-sealed and require no lubrication for their entire life Light oil should be applied periodically to the trunnions the worms, the gear segments, the handwheel bearings and the arm pin #10.

Dust should be removed frequently from the worms and gear segments for smooth operation. By following these procedures regularly you will assure a long and free trouble service from your saw.

SCIE 250 SAW

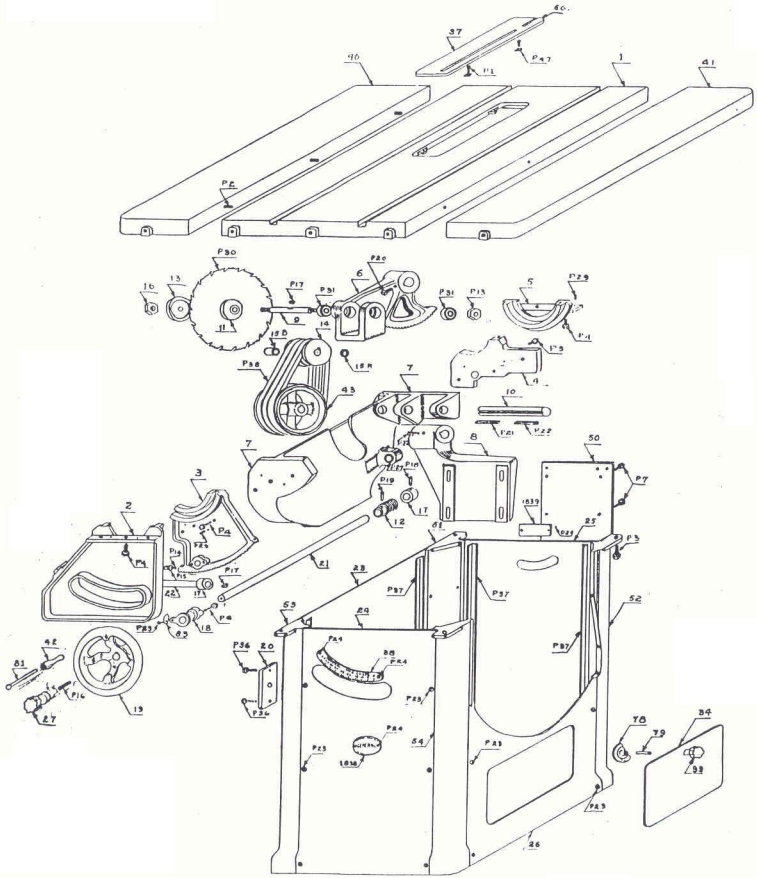

REPLACEMENT PARTS FOR 10" TILTING ARBOR SAW

IMPORTANT: Always mention serial number of the machine when ordering repair or replacement parts.

No.	Parts	Description	Quant.
		Table Assembly	
1	251	Table	1
37	2537	Table insert	1
40	2540	Left extension	1
41	2541	Right extension	1
56	2556	Dado insert	1
P1	P251	8/32 x 5/8 R. H. Machine screw	4
P2	P252	3/8 x 1 Cap screw	6
P47	P2547	8/32 Hex nut	4
		Chute Assembly	
2	252	Sector	1
3	253	Tilting Trunnion	1
4	254	Female Trunnion	1
5	255	Male Trunnion	1
7	257	Chute	1
10	2510	Arm pin	1
P4	P254	5/16 x 3/4 Cap screw	3
P5	P255	5/16 x 7/8 Cap screw	3
P14	P2514	5/16 x 3/4 Cap screw	2
P15	P2515	5/16 Hex jam nut	2
P29	P2529	3/16 x 3/4 Dowel pin	4
		Arbor Housing Assembly	
6	256	Arbor housing	1
9	259	Saw arbor	1
11	2511	Flange	1
14	2514	Arbor pulley	1
15A	2515A	Spacer	1
15B	2515B	Spacer	1
15	2516	5/8 Hex nut L. H.	1
43	2543	Motor pulley	1
P13	P2513	5/8 N. F. jam nut	1
P17	P2517	3/16 x 3/4 woodruff key	1
P20	P2520	5/16 x 1 1/2 Cap screw	1
P21	P2521	1/4 x 1 1/2 Square key	1
P30	P2530	10" Combination saw	1
P38	P2538	Vee belt	2
P31	P2531	#88016 N. D. Ball bearing	2
		Motor Bracket Assembly	
8	258	Motor bracket	1
50	2550	Motor plate	1
P7	P257	5/16 x 3/4 Cap screw	4
P20	P2520	5/16 x 1 Set screw	1
P22	P2522	1/4 x 2 square key	1
		Handwheels Assembly	
12	2512	Worm	2
17	2517	Collar	2
18	2518	Handwheel Bearing	1
19	2519	Handwheel	2
20	2520	Handwheel flange	1
21	2521	Front handwheel shaft	1
22	2522	Side Handwheel	1
27	2527	Handwheel knob shaft	2
42	2542	Handle	2
81	2581	Pin	2
83	2583	Pointer	1
P6	P256	1/4 x 1 3/4 Cap screw	2
P16	P2516	Handwheel stud	2
P17	P2517	3/16 x 3/4 Woodruff key	2
P18	P2518	#4 x 1 1/4 Taper pin	2
P19	P2519	#4 x 1 Taper pin	2
P23	P2523	1/4 x 3/8 R. H. Machine screw	1
P27	P2527	L 895 Oilite Bushing	4
P36	P2536	1/4 x 3/4 Cap Screw	2
		Cabinet Parts	
23	2523	Left side Panel	1
24	2524	Front panel	1
25	2525	Rear panel	1
26	2526	Door panel	1
33	2533	Door knob	1
34	2534	Door	1
38	2538	Degree plate	1
1838	1838	Name plate	1
1839	1839	Serial plate	1
51	2551	Left rear leg	1
52	2552	Right rear leg	1
53	2553	Left front leg	1
54	2554	Right front leg	1
78	2578	Cam	1
79	2579	Knob stud	1
P3	P253	3/8 x 1 Cap screw	4
P23	P2523	1/4 x 3/8 R. H. Machine screw	21
P24	P2524	No. 7 x 1/4 Sheet metal screw	6
		Fence Parts	
28	2528	Rear guide bar	1
29	2529	Fence bracket	1
30	2530	Fence	1
31	2531	Fence lock	1
32	2532	Fence stud	1
35	2535	Fence knob	1
36	2536	Gear knob	1
39	2539	Front guide bar	1
44	2544	Gear stud	1
45	2545	Fence lock stud	1
46	2546	Thumb nut	1
47	2547	Pin	1
48	2548	Lbek screw	1
49	2549	Spacer	1
55	2555	Arm	1
P8	P258	3/8 x 3/4 Cap screw	2
P25	P2525	5/16 x 3/4 flat head machine screw	6
P32	P2532	S2414 Spur gear	1
P41	P2541	1/4 Hex. nut	1
P46	P2546	Compression spring	1
P48	P2548	3/16 x 1" Dowel Pin	2
		Miter gauge	
57	2557	Miter gauge	1
58	2558	Indexing bracket	1
59	2559	Miter gauge bar	1
60	2560	Hand knob	1
61	2561	Screw	1
62	2562	Pin	1
63	2563	Pointer	1
64	2564	Indexing pin	1
65	2565	Rod	1
66	2566	Bent rod	1
67	2567	Clamp	2
82	2582	Knurl disc	1
84	2584	Degree plate	1
P24	P2524	No. 2 x 1/4 drive screw	3
P26	P2526	10/32 x 1/4 R. H. Machine screw	1
P33	P2533	3/16 x 3/4 Carriage bolt	1
P34	P2534	3/16 Thumb nut	1
P35	P2535	1/4 x 1/2 Thumb screw	2
P39	P2539	10/32 x 3/8 Fillister H. machine screw	1
P40	P2540	1/4 x 1/2 Pin	1
P45	P2545	Compression spring	1
		Protector Parts	
1838	1838	Name plate	1
68	2568	Support	1
69	2569	Plate	1
70	2570	Bracket	1
71	2571	Out bracket	1
72	2572	Protector	1
73	2573	Steel strip	2
74	2574	Protector arm	1
75	2575	Protector pin	1
76	2576	Dowel pin	3
77	2577	Wood stop	2
P10	P2510	1/4 x 1/2 cap screw	2
P11	P2511	10/24 x 1/4 Fillister H machine screw	2
P12	P2512	3/8 x 5/8 cap screw	1
P24	P2524	No. 2 x 1/4 drive screw	2
P42	P2542	3/16 x 3/4 cap screw	1
P43	P2543	3/16 Hex nut	1
P44	P2544	1/4 x 1/4 H. H. Hex. set screw	1