INSTRUCTION BOOK

and

PARTS CATALOG

for

High Speed — All Geared SUPER SERVICE RADIAL

Having 9-Inch Diameter Column and 3-Foot or 4-Foot Arm

Represented By

THE MOTCH & MERRYWEATHER MACHINERY CO.

Fifth Floor - Penton Building
Cleveland 13, Ohio
MAIN 1-1000

THE CINCINNATI BICKFORD TOOL COMPANY
OAKLEY, CINCINNATI, OHIO, U. S. A.

BOOKLET R-23 A

INSTRUCTION BOOK and PARTS CATALOG for

High Speed — All Geared SUPER SERVICE RADIAL

Having 9-Inch Diameter Column and 3-Foot or 4-Foot Arm

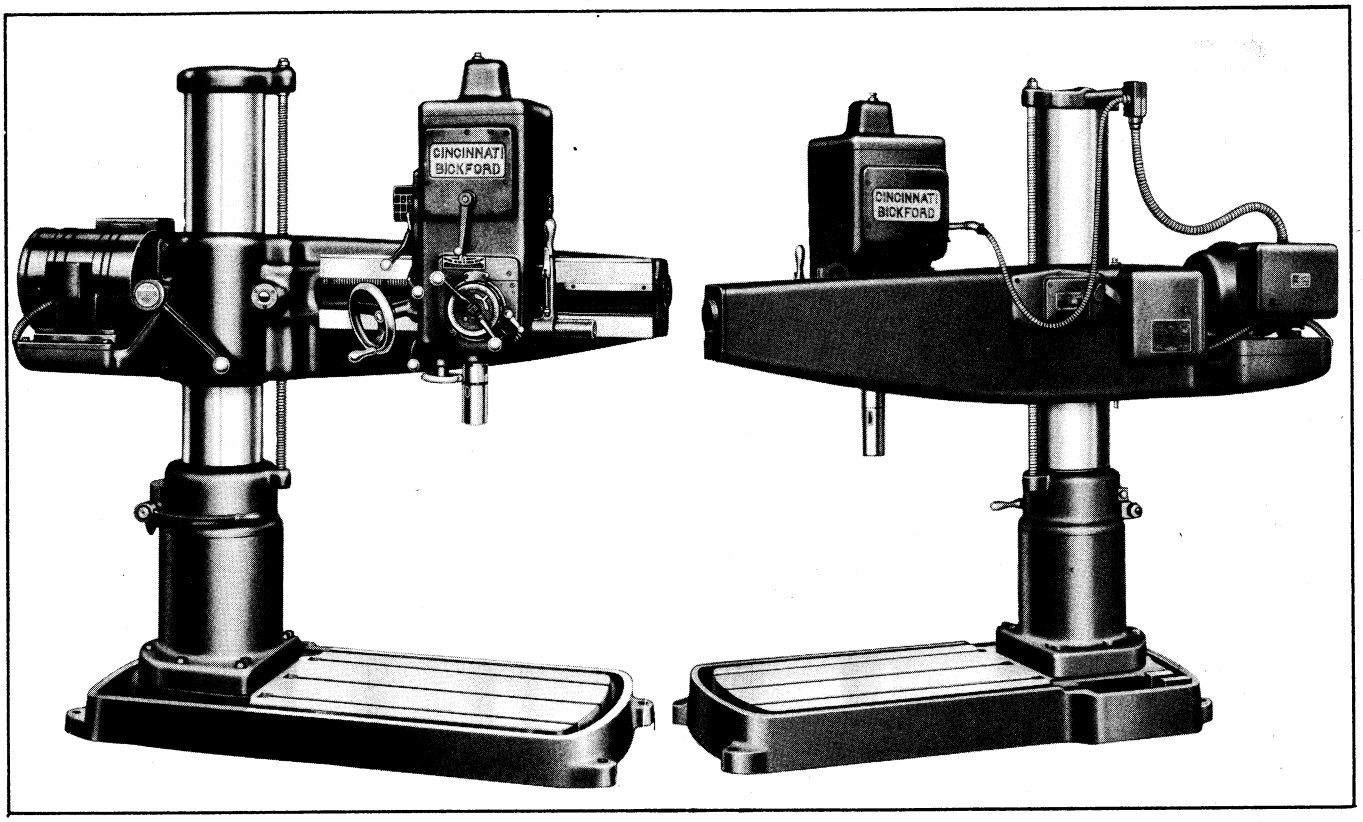

Your SUPER SERVICE Radial Drill is a finely made tool. It has been built with painstaking care and accuracy to insure your having the best in radial drills.

All of its mechanism is completely enclosed. Its oiling is automatic and it is protected by every practical accident prevention feature - but, if you want years of uninterrupted service with low upkeep cost, there are two things that must be observed.

> The machine should be properly installed. It should receive intelligent care and treatment, after it has been placed in service.

This booklet contains detailed instructions for the installation, operation and care of the SUPER SERVICE Radial. It should be thoroughly studied by the man in charge of erection, the radial drill foreman, the operator and by the man in charge of maintenance. The instructions in this book should be carried out in detail.

In conclusion, remember that no radial is better built than the SUPER SERVICE Radial. Remember, too, that no machine tool, regardless of how well it is built, will stand up for a long period under abuse, neglect or indifferent treatment.

Give your SUPER SERVICE Radial a square deal and it will serve you well.

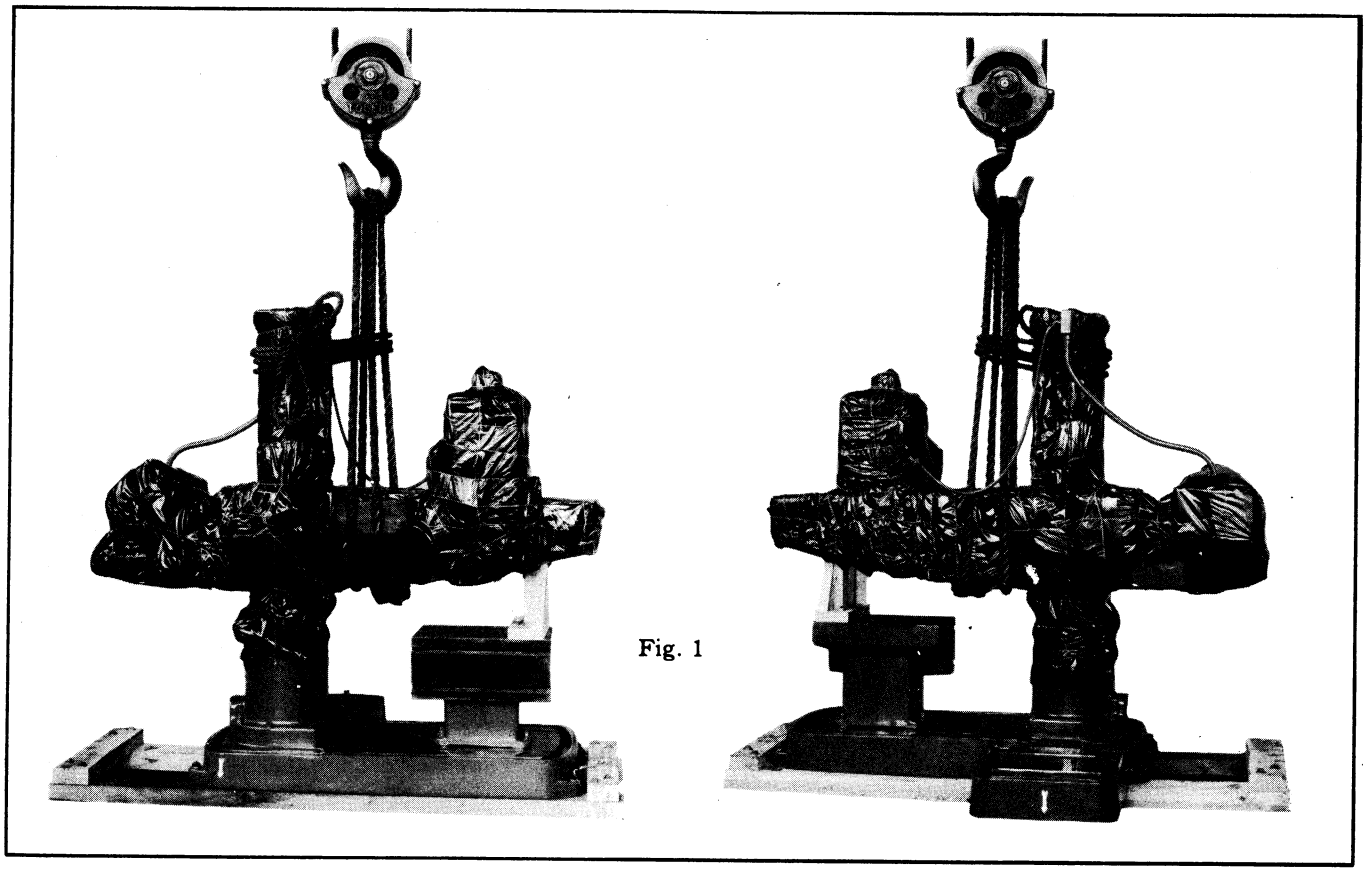

Fig. 1

Unloading

For the information of the erecting crew, the following approximate hoisting weights of the SUPER SERVICE Radials are given:

3' arm, 9" column, 4,900 lbs.
4' arm, 9" column, 5,300 lbs.

These weights apply to standard machines without extra equipment except motor and table.

Before unloading from car, observe the following precautions:

1. Do not remove the waterproof covering from the machine until it has been set in place.

2. Make certain that the three levers marked "A", "B", and "C", (Figure 7) are in the clamping position - "A" up, "B" back and up, and "C" down.

3. Place a 1½" new manila double rope sling around the arm as shown on Fig. 1. The ways of the arm are to be covered with heavy blocking to protect them from the sling. Care should be taken when placing the sling to see that it rests on this blocking. To protect the paint insert pieces of old leather belting under the rope. Put a rope hitch around the top of the column and the sling as shown. Take a light strain on the sling with the crane to make sure everything is all right before hoisting.

Foundation

Where the machine is located on the ground floor, many users prefer to install each machine on a concrete foundation. Such a foundation for the machine described in this booklet should have a depth of about one foot and be constructed in accordance with the foundation plans shown in Fig.5. The foundation bolts should be so arranged before pouring, that they can be moved about one inch in any direction after the foundation has set. This is to allow for slight errors in locating these bolts. Fig. 2 illustrates such an arrangement. When figuring the height of the foundation, an inch to an inch-and-a-half should be allowed between the base and the top of the foundation for grouting. In case of a

machine installed above the ground floor of a building,we recommend placing it on the strongest part of the floor, preferably near a column. It should be so located, however, that the building column does not offer any objectionable interference to the swing of the arm.

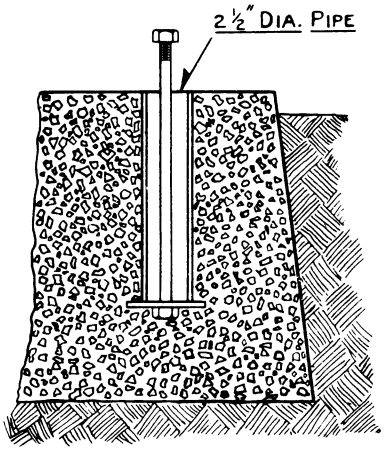

Fig. 2

If the floor is of concrete,the base may be grouted in. If the floor is of wood, wooden wedges should be packed in all around the base. In both cases,the machine should be bolted to the floor,either with expansion bolts, or bolts going through to the ceiling of the floor beneath.

Leveling

For the leveling operation, the most accurate level obtainable should be used. We recommend a level, 18" to 20" in length, having a bubble several inches long and a graduated glass tube. The ordinary machinist's level is not sufficiently accurate for high grade results and should only be used where nothing better is available.

A half dozen steel wedges, 2" wide and 8" long, tapering from 1/16" to 1" in thickness should also be provided. After the machine has been set in place on the foundation, a wedge should be inserted at each of the points indicated by arrows that are painted on the base. Make certain that the machine is resting only on these wedges and is not touching the foundation at any point. If the top of the foundation is uneven, put steel plates under the wedges.

Clean the top of the base thoroughly and remove any burrs or nicks that might have been received in transit. Care must also be taken to insure that there is no grit on the finished surface of the base or on the under side of the level. Grit can only be detected by rubbing these surfaces with the bare hands. Follow the instructions given in Fig. 4 and check the final readings several times to be sure that they are within the limits.

The remaining wedges should be used for packing. Place them so that the base will be evenly supported on all sides. These packing wedges must be lightly and carefully driven. They must be tight enough to insure a good bearing between the base and the foundation, but not so tight as to loosen the wedges that were used for leveling and thereby disturb the level of the machine. When all wedges are in place, make a final check of the leveling as outlined in the preceding paragraph. If it is correct, the machine is ready for grouting in, or packing all around with wooden wedges.

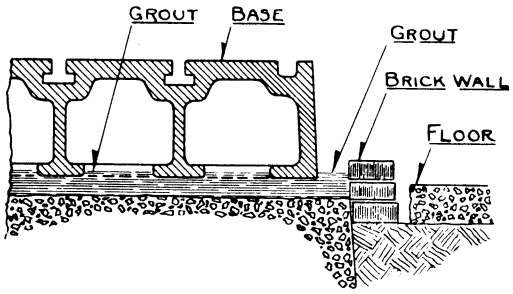

Fig. 3

Grouting

A grout of one part sand and one part cement should be used. It should be thin enough to flow under the entire base. Good practice is to build a wall of several courses of brick around the machine, leaving a space of several inches in width between the base and the wall as shown in Fig. 3. The grout is then poured into this space to about the level shown. After it has had sufficient time to harden, the brickwork can be removed. Incidentally, the grout should not be mixed near the machine. This precaution is necessary to prevent sand and cement dust getting on the finished surfaces.

IN LEVELING YOUR SUPER SERVICE RADIAL, TRAM IT THIS WAY BEFORE GROUTING OR FILLING BETWEEN WEDGES.

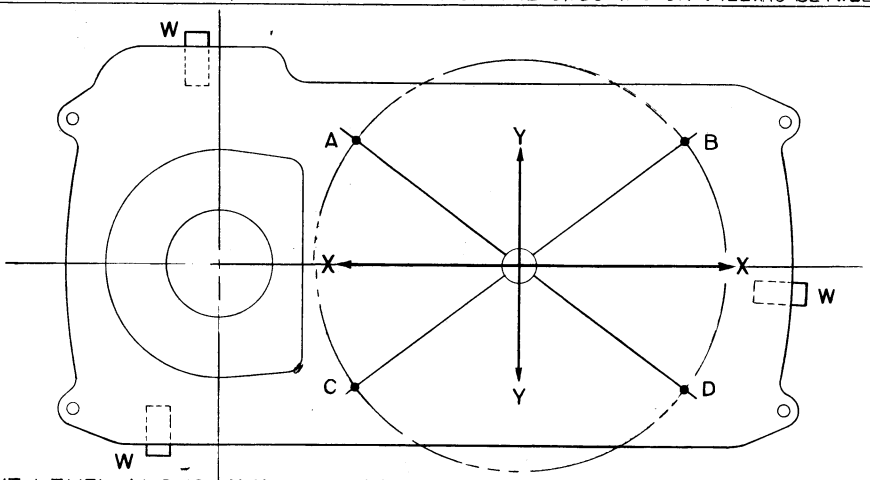

LEVEL WITH SENSITIVE LEVEL ALONG X-X & Y-Y WHILE SUPPORTED ONLY ON WEDGES W AS SHOWN.

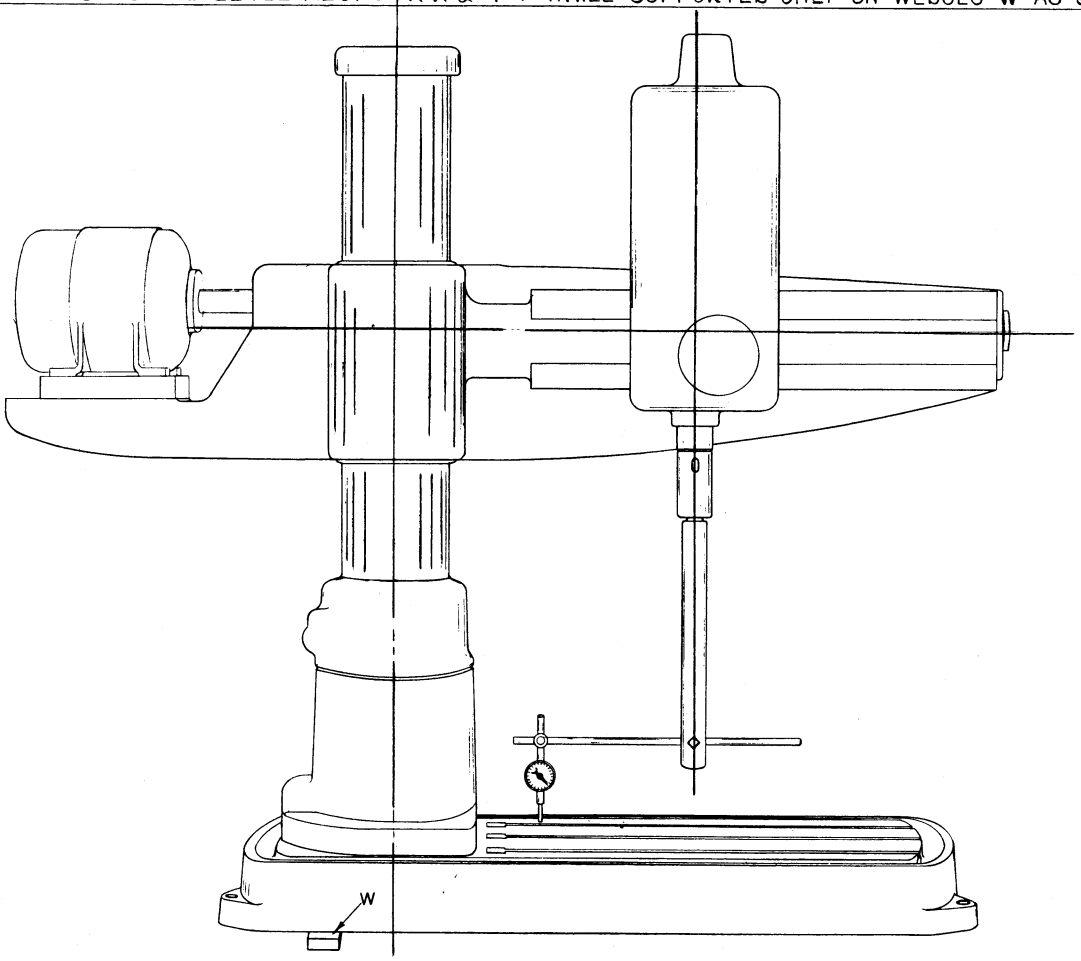

WITH BASE LEVELED, INDICATOR IN SPINDLE AS SHOWN SHOULD READ WITHIN .005" ON THE FOUR CORNERS, A-B-C-D. AN ERROR OF ONLY ABOUT .001" PER FOOT. IF READING SHOWS BASE HIGH AT A OR C, MOVE CORRESPONDING WEDGE TOWARD REAR OF COLUMN. IF READING SHOWS LOW MOVE WEDGES FORWARD.

TRAM B AND D BY MOVING END WEDGE RIGHT OR LEFT.

MOVING THE HEAD ALONG THE ARM AND READING INDICATOR IS NO CHECK.

FIG. 4

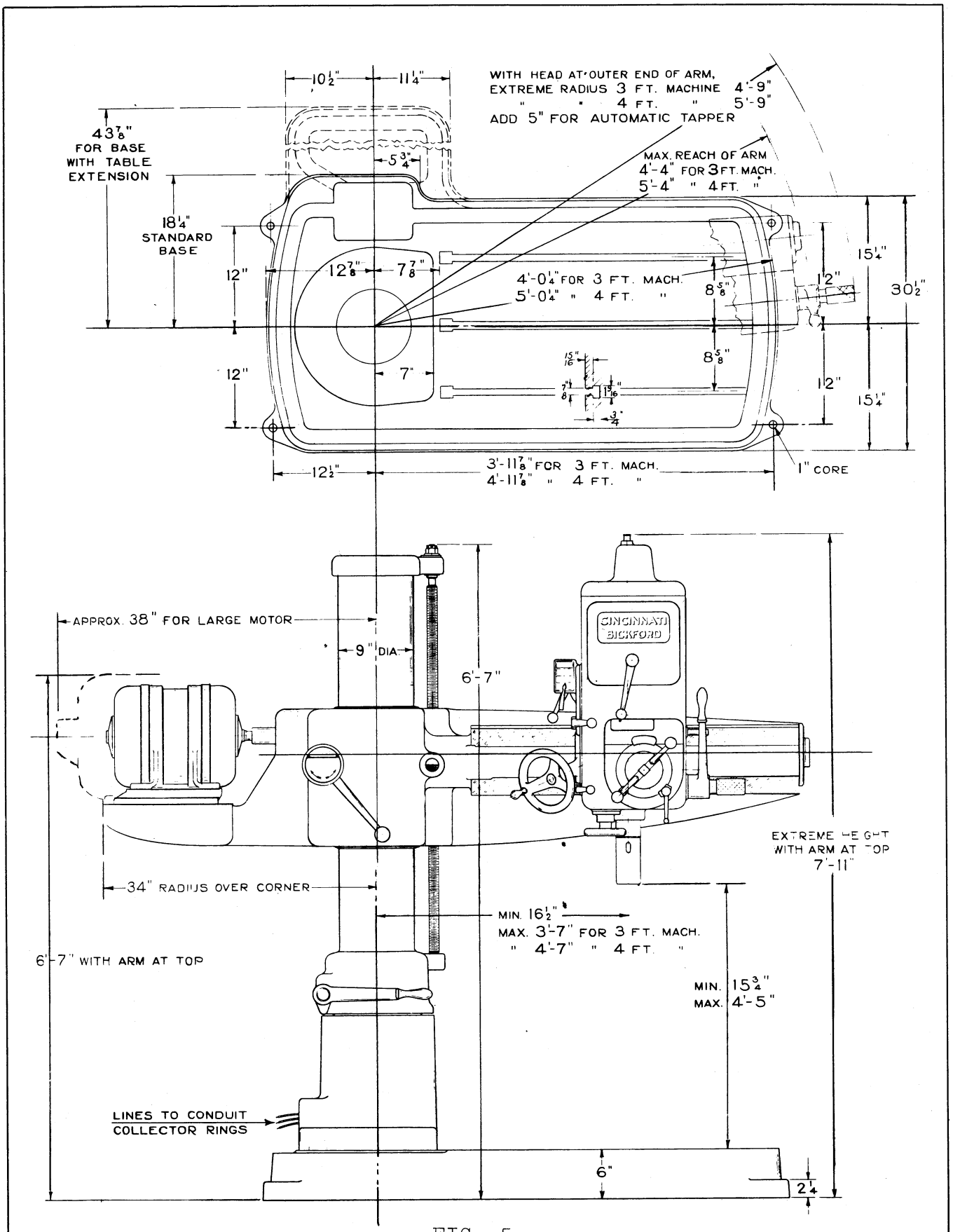
10½"
11¼"
WITH HEAD AT OUTER END OF ARM,
EXTREME RADIUS 3 FT. MACHINE 4'-9"
" " 4 FT. " 5'-9"
ADD 5" FOR AUTOMATIC TAPPER
43⅞"
FOR BASE
WITH TABLE
EXTENSION
5¾"
MAX. REACH OF ARM
4'-4" FOR 3 FT. MACH.
5'-4" " 4 FT. "
18¼"
STANDARD
BASE
12"
12⅞"
7⅞"
4'-0¼" FOR 3 FT. MACH.
5'-0¼" " 4 FT. "
8⅝"
1'2"
15¼"
30½"
12"
7"
15/16"
7/8"
1 3/16"
3/4"
8⅝"
12"
15¼"
12½"
3'-11⅞" FOR 3 FT. MACH.
4'-11⅞" " 4 FT. "
1" CORE
APPROX. 38" FOR LARGE MOTOR
9" DIA.
6'-7"
CINCINNATI
BICKFORD
EXTREME HEIGHT
WITH ARM AT TOP
7'-11"
34" RADIUS OVER CORNER
MIN. 16½"
MAX. 3'-7" FOR 3 FT. MACH.
" 4'-7" " 4 FT. "
6'-7" WITH ARM AT TOP
MIN. 15¾"
MAX. 4'-5"
LINES TO CONDUIT
COLLECTOR RINGS
6"
2¼

FIG. 5

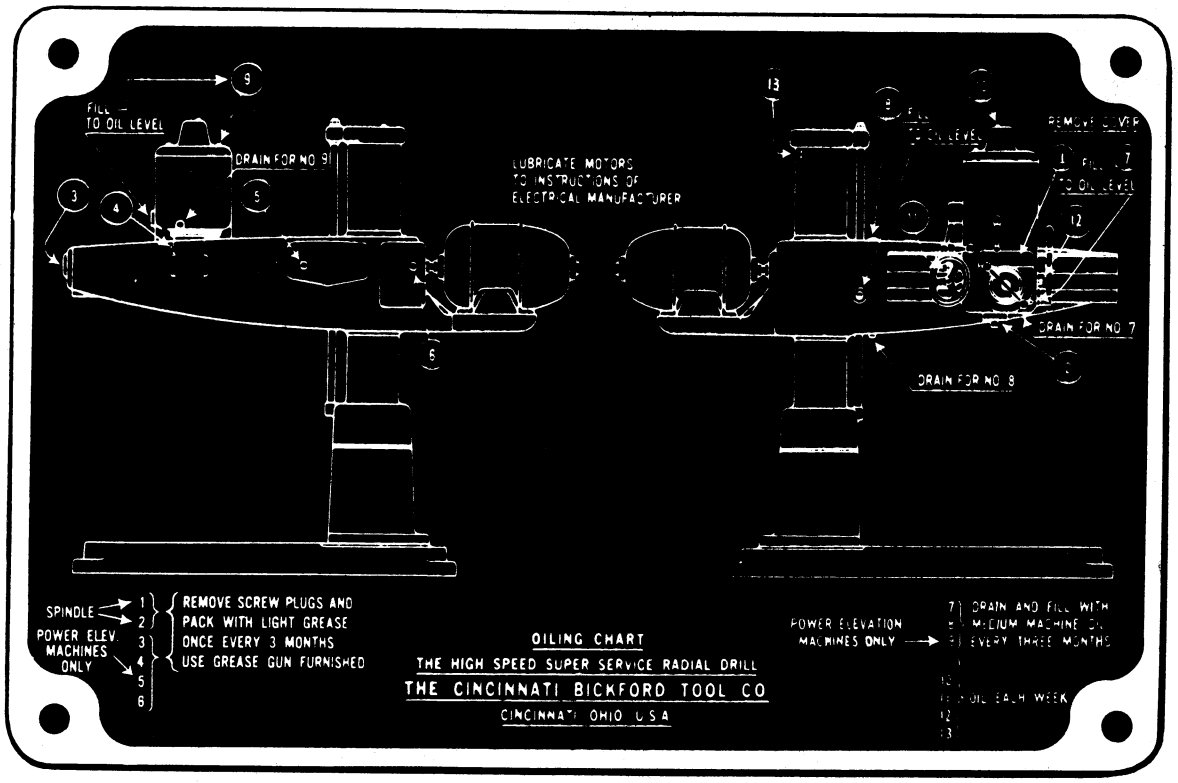

FIG. 6

Cleaning

For cleaning the machine, kerosene is preferable to gasoline. It does not evaporate and leave dried slushing compound on finished surfaces. The kerosene must be absolutely clean. The container that is used must be thoroughly cleaned before filling. Rags, if they are obtainable, are better than waste as they leave no lint or strings.

Do not move the head until the arm has been cleaned and oiled in the following manner. Take an ordinary scrub brush and clean the rack teeth thoroughly. Clean the finished surfaces of the arm on both sides of the head, being careful to remove all dirt and grit in the corners where the head fits on the arm. Rub the bare hands over the finished surfaces of the arm to make certain that all grit has been removed. This precaution is necessary to prevent cutting and scoring of the arm. With the fingers, rub plenty of oil on all of the finished surfaces of the arm.

Swing the head clamping lever "A", Fig.7, downward as far as it will go. The head may now be moved along the arm by means of the head moving handwheel. If the head appears to move stiffly, it is because of the newness. This will ease up after the machine has been in use a short time.

Clean the spindle nose and sleeve as follows: Push the quick return levers, Fig. 7, toward the head and move the spindle downward as far as it will go. Do not raise the spindle as this will draw dirt and slushing into the spindle bearing in the head.

Clean thoroughly. Clean the rack teeth with a scrub brush. There is a metal-to-metal fit between the teeth of the rack and its pinion. Any dirt or slushing will interfere with the movements of the spindle. Oil the surface of the sleeve and the rack thoroughly. The spindle may now be moved either up or down.

Clean the elevating screw with a scrub brush and oil thoroughly. Be sure that all dirt and slushing is removed. Clean the column, above and below the arm. Clean thoroughly where the arm meets the finished surface of the column. Rub with the bare hands to make sure that all grit has been removed and oil thoroughly.

Oiling

The machine as received by you, has been completely drained of all oil, but has sufficient grease for three to five months use. Before any attempt is made to run it - before any motor connections are made - every detail of the following oiling instructions must be complied with.

Refer to the oiling chart, Figure 6.

Items 1 to 6 inclusive are lubricated with a high grade of light non-fluid gun grease. A special grease gun is furnished with the machine for this purpose.

Items 1 and 2 are the upper and lower spindle bearings respectively. These are, perhaps, the most important bearings on the machine. The upper bearing is reached through a removable cover plate located on the front of the head and above the quick-return levers. Remove the brass plug in the spindle sleeve and give this bearing one-fourth of the contents of the grease gun after about four months of normal operation. To oil the lower spindle bearing, move the spindle downward to its lowest position and remove the brass plug in the lower part of the spindle sleeve. Give this bearing one-fourth the contents of the grease gun.

The arm shaft end bearing is to be greased at point 3 every three months.

Item 4 provides for lubricating the driving shaft bracket and requires sufficient grease to show on the splines of the arm shaft, once every three months. Items 5 and 6 also require a small amount of grease every three to four months.

Items 7, 8 and 9 are reservoirs for the mechanisms that run in oil. Before starting, remove the filler plug at oil level for #7 and fill thru the cover at #7 with a good grade of medium machine oil. Then remove the plug indicated by #8 and fill with a good grade of medium machine oil to the oil level, indicated by the oil gauge at the front of the arm. Then remove the cover #9 and fill to the oil level indicated by the gauge on side of the head. Each of these three reservoirs are to be drained and refilled every three months.

Item 7 is the reservoir in the lower part of the head that oils the feed worm and worm wheel.

The reservoir indicated at oil level #9 supplies oil to the entire speed and feed mechanism in the head. In the head is a high pressure oil pump that pumps oil to the top. From this point the oil cascades down through the gears and bearings and drains back to the reservoir. This oil pump is a gear pump that will not lose its priming.

A sight feed glass on the side of the head indicates the oil flow. This should show, when the spindle is running, an oil stream about 1/8" in diameter.

The driving motor should be lubricated in accordance with instructions furnished by the manufacturer. Oilers are located at points marked 10, 11, 12, and 13, which require but a few drops of oil once a week.

Note:- Where the machine is run continuously on day and night shifts, it must be oiled twice as often as indicated on the above schedule.

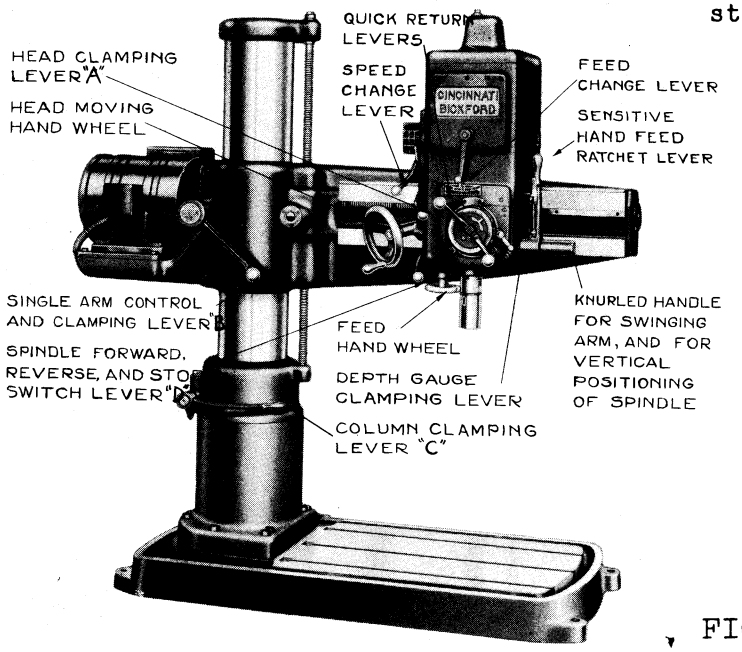

FIG. 7

OPERATION

Starting

The following operating instructions must be gone over before any attempt is made to start the machine.

Before starting, put the spindle control lever "D" Fig. 7, in neutral, which is midway between its extreme positions. Push the quick-return levers, Fig. 7, toward the head as far as they will go. Put the arm control lever in the clamped position, that is back, and up as far as it will go. Then turn the machine over by hand to make sure that it revolves freely.

By means of temporary connections, check the direction of rotation of the driving motor. When the motor is connected so that the spindle runs in a drilling direction with the control lever pressed down, the connections can be made permanent.

To run the spindle left-handed, as in backing out taps, pull the spindle control lever "D" up as far as it will go.

To stop the spindle,put the spindle control lever "D" midway between these two positions.

Selection of Spindle Speeds

This SUPER SERVICE Radial has nine spindle speeds controlled by one lever near the center and at the left of the head. All of these nine speed changes are obtained through sliding gears. To shift these gears, jog the spindle control lever just enough to cause the gears to roll slowly - and then shift with a quick, decisive movement.

The speed plate is direct reading. It gives the spindle speeds in r.p.m. and the corresponding sizes of drills based on a cutting speed of 80' per minute. Capacity is limited to 1 3/4" drills in cast iron or 1 3/8" in steel. The larger diameters indicated on the speed plate serve as a guide to speeds for reamers, etc. For example, boring tools of half the diameters shown would run at 40' per minute.

Selection of Feeds

The High Speed SUPER SERVICE Radial has four feeds. The feed lever at the center of the head provides these feed changes through sliding gears, and can be changed while the spindle is running idle. The feeds are shown on a plate, under the lever, in thousandths of an inch per revolution of the spindle. The feed lever also has a neutral position which is useful when feeding by hand feed wheel.

To start the spindle feeding downward, pull the quick-return levers away from the head as far as they will go. This engages the feed. To stop the feed any time, push the quick-return levers toward the head.

There is a limit trip that disengages the power feed when the spindle comes within one-fourth inch of its lower or upper limit of travel. This prevents the teeth of the rack pinion from running into the spindle sleeve at the end of the rack.

The feed mechanism also includes an adjustable dial which automatically disengages the feed when the drill has penetrated to a required predetermined depth.

To advance the drill to a given depth, set the point of the drill so that it touches the work. Unclamp the graduated ring by swinging the depth gauge clamping lever, Figure 7, in a clockwise direction until it points downward.

Revolve the graduated ring until the point on the ring, that corresponds to the required depth, registers with the pointer. When these settings have been made, swing the depth gauge clamping lever upward until the graduated ring is firmly clamped. Engage the feed. When the drill reaches the required depth, the feed will automatically disengage.

Moving the Head on the Arm

The head is moved along the arm by means of the head moving hand wheel, Figure 7, with the head clamping lever "A" released, (pushed down). The head is square-locked to the arm and mounted on ball bearing rollers, bearing on a hardened steel arm-way. This is an exclusive feature which permits the head to be moved rapidly and very easily by hand. It makes a power rapid traverse attachment unnecessary on a machine of this size, for one turn of the hand-wheel will move the head 3 inches.

Raising, Lowering and Clamping the Arm

On the High Speed SUPER SERVICE Radial, a single lever ("B" Fig. 7) clamps, unclamps, raises and lowers the arm. To unclamp the arm, rotate the lever down until it can be pulled forward in the horizontal slot. To raise the arm, move the lever forward through the horizontal slot and swing upward. To lower the arm, swing downward in the forward slot. To stop the arm, put the lever back in the rear slot, and push it up to clamp the arm. This construction makes it impossible to engage the elevating mechanism while the arm is clamped to the column, or to clamp it while moving. Safety trips are provided to disconnect the power traverse when the arm is moved to its limits of travel.

Before raising and lowering the arm make certain that the instructions for cleaning and oiling the column and the elevating screw, have been carefully followed. When the arm is moved for the first time - move it down - lower it several inches. Remove the ring of slushing that remains. Oil the surface that has been cleaned. Then, raise the arm to its highest position. Remove any slushing that is left and oil thoroughly. Excessive wear of the arm surfaces that bear on the column will soon destroy the machine's accuracy. For this reason, always keep the column clean and well oiled.

Clamping the Column

The column clamp locks the arm rigidly for drilling prevents it from swinging sideways. Hand clamping is standard equipment on all machines. To clamp the column by hand, move the column clamping lever "C" Fig. 7, downward as far as it will go. To unclamp the column, for swinging the arm, move this lever upward as far as it will go.

High speed SUPER SERVICE Radials, when so ordered, are equipped with electric column clamps. The machine so equipped is shown at the top of page 19. Electric column clamping is obtained through a motor mounted on the column. This motor is controlled by push buttons on the right side of the head. One button clamps, the other unclamps. In operating the electric column clamp, release the button as soon as the motor stops revolving.

This motor is so constructed that it can remain stalled on the line for a period of five minutes without damage to windings. In actual operation, it is never on the line for more than a few seconds at a time - only while the control button is depressed. The electric column clamp is completely wired at the factory. It becomes operative as soon as the machine is connected to a power circuit.

Note:- When the electric column clamp is in use, the hand clamping lever must be kept in the unclamped position.

ADJUSTMENTS

Quick-Return Clutch

The quick-return clutch, Figure 8, is of the positive type. The action of the quick return levers expands two saw-tooth segments of hardened steel into a

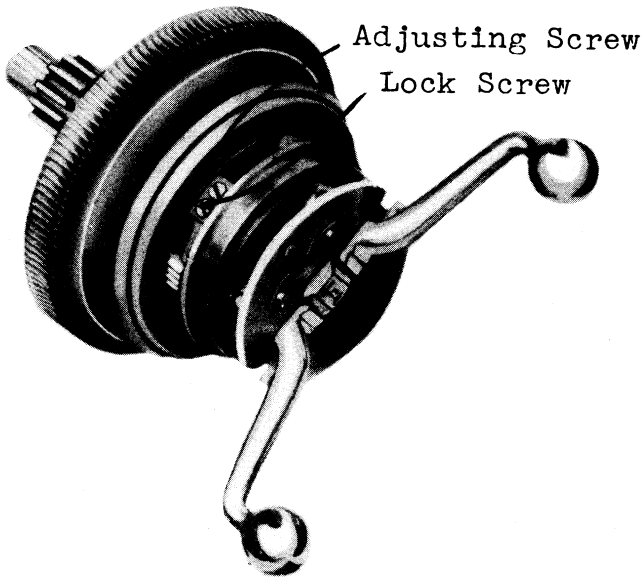

FIG. 8

hardened steel ring having saw teeth in its inner circumference. This clutch may not require any adjustment for several years. But, should an adjustment be necessary, it is made in the following manner. Remove the narrow, horizontal cover plate located on the front of the head above the quick return levers. Rotate these levers until the adjusting screw and the lock screw, figure 8, can be reached with a screw driver.

Loosen the lock screw and tighten the adjusting screw so that there is very little play between the teeth of the segment and the ring. Tighten the lock screw. Rotate the levers one-half a turn and adjust the other segment in the same manner.

Adjustment of Head Moving Ball Bearing Rollers

Refer to Figure 9.

The head is mounted on anti-friction bearings D and U which roll on a hardened and ground steel armway. These require extremely accurate adjustment to insure freedom of head movement yet maintain accurate alignment of spindle. This adjustment is made and tested at the factory and in all probability will never need readjustment. Should adjustment be necessary, loosen the hollow hex set screw E & V on each side of head, in line with the roller studs F and W. The roller studs F and W are eccentric and have hexagon heads. The arrow stamped on the hex head indicates the high point of the eccentric. By turning the studs so the arrows point farther downward, the head is drawn more snugly against the bottom way of the arm. If freedom of movement of head has been retarded, the arrows should point farther upward. With the head moving freely a .0015" thickness gauge blade must not enter either side of the head at the bottom arm way. After tightening hollow hex set screws E and V on each side of head, test spindle AF for alignment with dial indicator as shown in Figure 4.

Spindle Adjustment

The spindle AF revolves in ball bearings AC and K, and if lubricated according to oiling chart on back of arm, end play should not develop. However should end play develop, it is taken up in this manner. Remove the narrow horizontal cover in front of head above quick return levers. Raise or lower spindle AF, Figure 9, until jam nut G having lock screw H appears. Loosen the lock screw H about one turn. Tighten the jam nut G until the spindle AF is pulled up fairly tight, then back off the jam nut 1/8" to 1/4" measured along the outer circumference. After adjustment has been made, set lock screw H tight as possible. With a center punch, burr the jam nut into the slot of the lock screw to keep it from loosening.

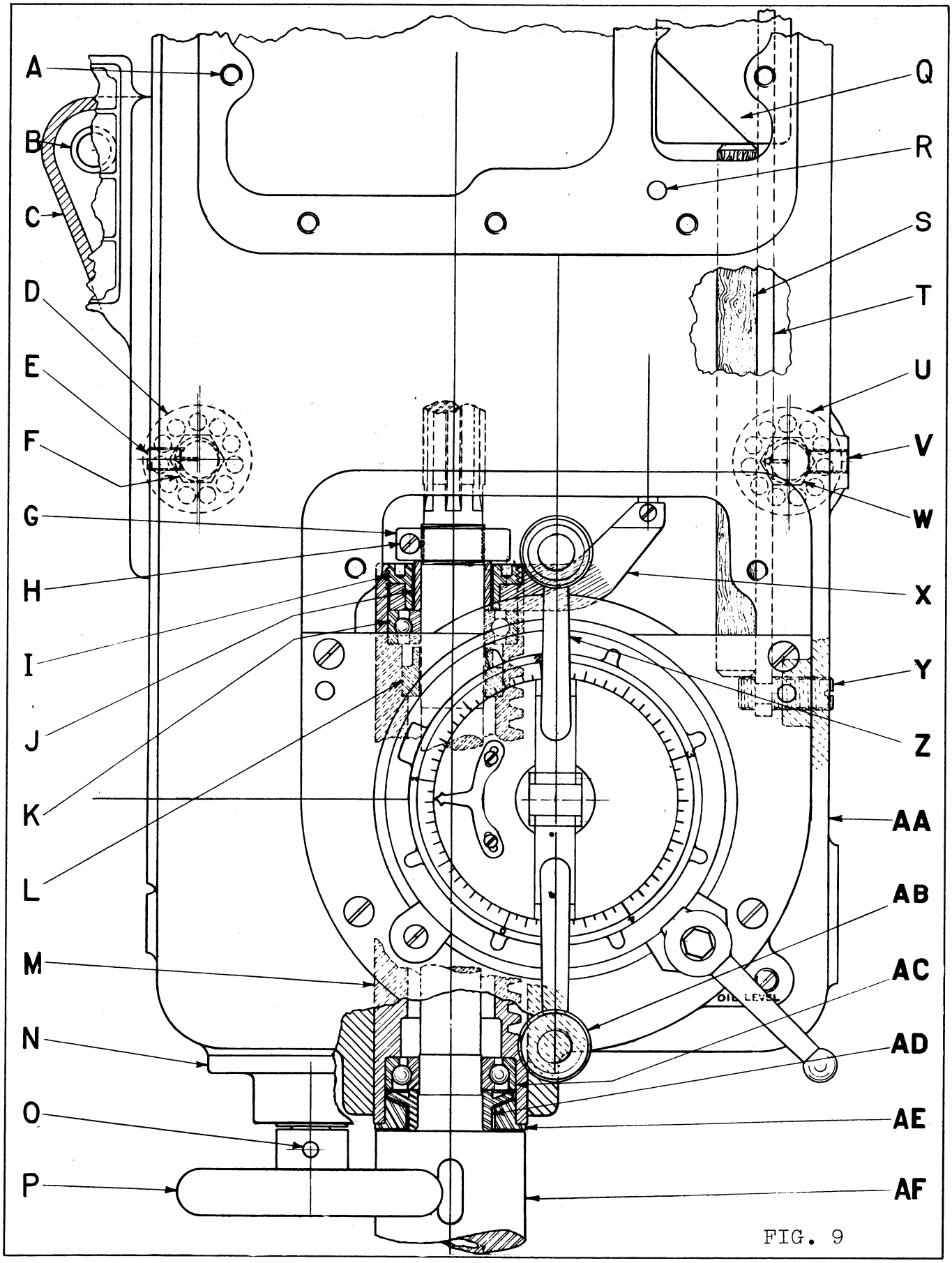

FIG. 9

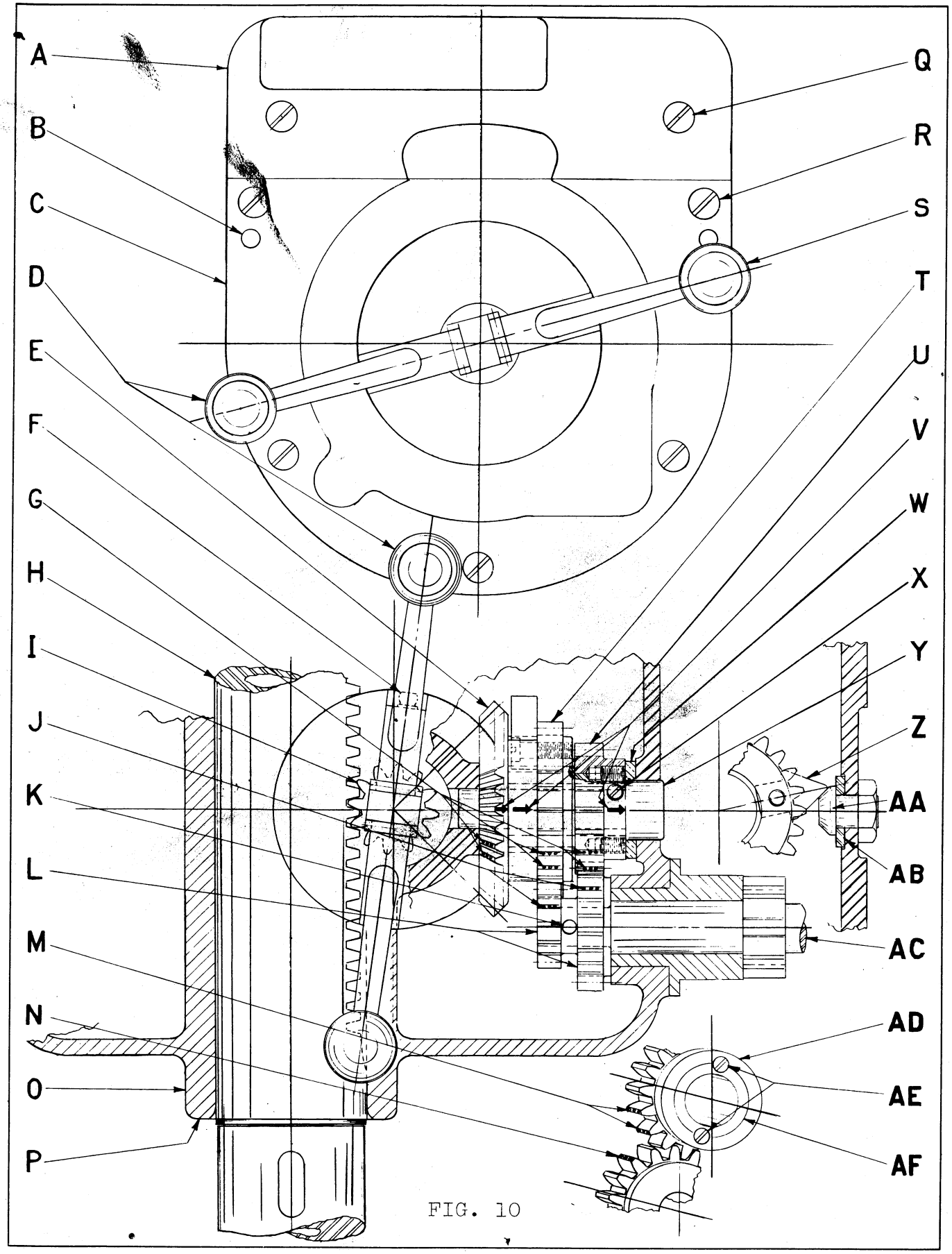

FIG. 10

TAKING THE MACHINE APART

TO REMOVE QUICK RETURN UNIT
(Refer to Figure 10)

1. Drain oil.

2. Remove 2 screws Q.
Remove upper cover A.

3. Remove 5 screws R.
Remove lower cover C together with whole quick return unit by pulling on the quick return levers D and S in the released position. Two taper pins B will come out with the cover.

TO REPLACE QUICK RETURN UNIT
(Refer to Figure 10)

1. Place lower end of spindle sleeve H flush with bottom P of head O as shown in diagram.

2. Place feed rack pinion I in position in spindle sleeve H with quick return levers D and S in approximately vertical position (as shown).
Small feed trip knob F must be in the upper position.
See that center punched tooth on miter gear (not shown on drawing) is meshed between the two center punched teeth G on miter gear E.

   The three arrows V should now appear on the horizontal center line of gears E, T, and U.

3. In case gears E, T, U or L have been removed re-timing will be necessary. Proceed as follows. Knock out taper pin K using brass (not steel) rod for this purpose, and remove shaft AC and double gear L. Place spindle sleeve H and miter gears as in first and second paragraph. Now turn gear T until arrow V is in line with arrows V on gear E and U. Replace gear L on shaft AC seeing that single punched teeth J and N mesh between the double punched teeth G and M on gears T and U. Replace pin K.

4. Using quick return lever D or S raise spindle sleeve until trip dog Z strikes solid stop AA, as shown on drawing. Proceed in the same manner for the lower position. The clearance between the rack teeth and the rack pinion I at each extreme should be about the same.

5. Engage quick return clutch and raise spindle using feed handwheel until automatic trip functions. The spindle should have about 1/8" more movement through use of quick return levers before contacting the positive stop. The same applies to the lower extreme.

6. Being certain that each step in the foregoing instructions has been carefully executed, replace drain plug and refill to oil level. Power feed may now be engaged.

The above applies to the replacement of the original parts.
If new gears in the Limit Trip unit are required, proceed as follows.

1. With feed rack pinion positioned as described before, match miter gear E with its mate. Allowance for facing inside of hub is provided.

2. Assemble gear E with gears T and U and face off washer W to match.

3. Loosen set screw X in gear U and raise spindle until within 1/8" of upper extreme. Set limit trip gear T so that dog Z contacts stop AA. Tighten screw X slightly and repeat this process for the lower extreme. If necessary equalize clearance at each end, then tighten screw X. Should more clearance be required use thicker washer AB.

4. With spindle sleeve H flush with bottom P of head O, stamp gears E, T and U on the horizontal center line with arrows V, or other distinct marks. The feed rack and pinion, the two miter gears and the four spur gears are now properly timed, and must never be replaced in any other relationship.

5. Mark mating teeth of each pair of the six gears by center punching a single tooth J or N on one of each pair, and the two adjacent teeth G or M of each mate.

6. Remove shaft Y and gears E, T and U. Drill and tap for two 5/16" x 1/2" set screws AE in hubs AD and AF of gears E and U. Remove temporary screw X.

7. Pin double gear L to ratchet shaft AC using #5 taper pin K.

8. Assemble as described before. Engage quick return clutch and use feed handwheel to test functioning of automatic trip for both extremes before engaging the power feed.

TO REMOVE THE FEED UNIT
(Refer to Figure 9)

1. Drive taper pin O out and remove feed handwheel P.

2. Remove four filister screws from feed shaft retainer N on bottom of head.

3. Replace handwheel P and use babbitt hammer to tap handwheel with retainer and shaft down just 3". Block handwheel in this position until feed unit is replaced. If the handwheel dropped 1/2" farther the feed worm would become unmeshed and the entire quick return unit would have to be removed to replace it.

4. Remove two taper pins R and nine filister screws A in feed bracket in front of upper part of head AA, grip around arm of feed change handle, tap all around with babbitt hammer to break oil seal, and withdraw feed unit.

TO REMOVE SPINDLE WITHOUT SLEEVE
(Refer to Figure 9)

1. Clamp column to prevent arm from swinging.

2. Raise or lower arm until it is 8" above its lowest position and clamp.

3. Shut off and disconnect current to motor.

4. Remove narrow cover plate A figure 10 above quick return levers Z and AB figure 9.

5. Raise or lower spindle until jam nut G appears in the opening.

6. Block up between spindle and base to prevent spindle AF dropping when jam nut G is removed.

7. Lock the quick return clutch by pulling the two quick return levers Z and AB together.

8. Bind the two quick return levers Z and AB together in this position, using wire or heavy twine. This is done to prevent accidental disengagement of clutch. Do not remove the binding until the spindle has been replaced and the jam nut has been tightened.

9. Loosen jam nut lock screw H and back jam nut G off thread.

10. Put a bar through the spindle AF tang slot and hold the spindle securely. Remove blocking. Remove spindle.

11. In assembling see that the wide surface on the outer ball race AC at the lower end is placed toward the top, and proceed as per spindle adjustment instructions.

TO REMOVE SPINDLE AND SLEEVE
(Refer to Figure 9)

1. Clamp column to prevent arm from swinging.

2. Raise or lower arm until it is 8" above its lowest position.

3. Shut off and disconnect current to motor.

4. Remove narrow cover plate A, figure 10, above quick return levers D and S.

5. Drain oil by removing pipe plug on bottom of head to the right of spindle.

6. Move spindle AF, figure 9 up and down and observe position of lead counterweight in the right hand side of the head. Now move spindle down to its lowest position.

7. Insert block of wood S, 3/4" x 1 1/2" x 10", through opening placing lower end on screw Y near bottom of counterweight guide rod, T raising spindle cautiously until counterweight Q rests on upper end of block S. Make certain that this is holding securely and continue to raise spindle until chain is slack.

8. Raise spindle AF until jam nut G appears opposite opening, and block up securely between spindle and base.

9. Remove quick return unit according to paragraph three of instructions "To Remove Quick Return Unit".

10. Loosen spindle jam nut screw H and back jam nut G off thread.

11. Observe chain carrier X extending toward the right, and see that chain is slack.

12. With the jam nut G removed, the chain carrier lock nut I is exposed. This requires a pin face spanner for 3/16" holes, 2" centers, in the face of the nut. An adjustable "V" spanner may also be used.

13. Remove chain carrier lock nut I. Remove chain carrier X from top of spindle sleeve M and allow it to hang free on chain.

14. Put a bar through the spindle tang slot, and hold the spindle AF securely. Remove blocking and remove spindle together with spindle sleeve M.

15. Turn spindle AF and sleeve M up side down. Grasp sleeve and tap spindle against wood block or wooden floor until sleeve bearings AC and K are released. Note carefully how each part is assembled.

16. To assemble the spindle and sleeve proceed as follows:

17. Place ball bearing AC stamped #20206 in the lower end of spindle sleeve M. Note the outer race of this ball bearing has a wider face on one side than the other. Tap the bearing in place with the wide face of the outer race against the shoulder in the sleeve.

18. Lay the small retainer AD in the sleeve M with short hub toward the ball bearing AC, and tap the large retainer AE in until its flange is tight against the end of the spindle sleeve M. The small retainer AD should show about 1/32" play in all directions.

19. If the small retainer L below the ball bearing K has been removed, replace it hub up.

20. Insert spindle AF into sleeve M. If properly mounted so far, it will show 1/32" clearance between top of spindle nose and the retainer AE at the bottom.

21. Tap upper ball bearing K marked 3206 or 206 either side up against the shoulder, and place small spacing collar J against ball bearing K.

22. Place spindle AF and sleeve M in head so that about 3" of the upper end of the spindle appear in the opening in the head AA.

23. See that counterweight chain is not twisted, and place chain carrier X, chain carrier lock nut I, and spindle jam nut G over end of spindle AF. The jam nut must be placed with the lock screw H to the left of the spindle when looking at the screw slot. Make certain that the spindle is securely blocked until counterweight chain is connected.

24. Adjust spindle jam nut G according to "Spindle Adjustment" instructions.

TO REMOVE HEAD FROM ARM
(Refer to Figure 9)

1. Disconnect machine electrically and remove head side cover C assembled with conduit connection B, from left side of head. If machine is equipped with automatic tapper, it will first be necessary to remove cover on small switch bracket on lower right hand side of head, detach one wire and tag or mark plainly both wire and post, so connections will not be reversed when replaced. Detach other wire and loosen small conduit from head leaving it assembled with main conduit. Now remove head side cover C.

2. Covering the outer end of the arm is the arm end bearing. Loosen two square head taper pins and three hollow screws, and withdraw end unit together with arm shaft.

3. Remove spacing bar at outer end of arm rack. Serial number of machine is stamped on this bar.

4. Drain oil from upper part of head and gear case by removing pipe plug in rear.

5. Drain oil from lower part of head by removing plug in bottom of head to the right of spindle.

6. Take head off end of arm. If overhead lifting facilities are available, remove the top cover and use the three 3/8" tapped holes for eye bolts through which a sling may be passed. The head complete weighs about 600 pounds.

7. When the head is replaced, run it back until the handwheel strikes the barrel of the arm. The handle should be in a position anywhere from the top to the outer extreme. If not in this position, run the head out beyond the end of the rack and re-time rack teeth and pinion.

8. Attach spacing bar showing serial number.

9. For machines with hand arm elevation, install arm shaft and end bearing complete.

10. For machines with power arm elevation, remove large cover in rear of arm barrel, held by two screws. Reach into hole and find sleeve, which has fallen slightly from its position. Guide sleeve onto shaft as shaft is inserted.

TO REMOVE THE REVOLVING ELECTRICAL CONNECTIONS INSIDE THE LOWER PART OF THE COLUMN.
(Refer to Fig. 11)

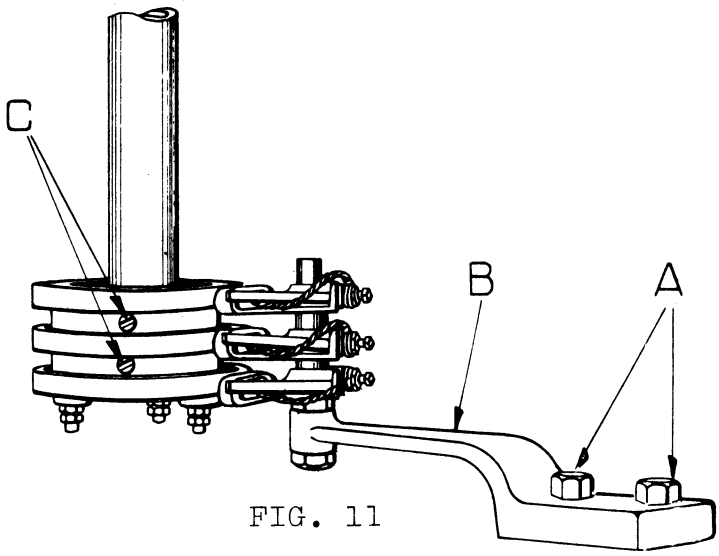

FIG. 11

1. Disconnect the machine electrically from the main lines and then remove two screws "A", figure 11.

2. Remove brush holder "B".

3. Disconnect the wires at the bottom of collector rings.

4. Swing the radial arm until the two screws "C" (three screws for four collector rings) appear in the opening at the bottom of column.

5. Release these screws three or four turns and drop collector rings off bottom of conduit.

6. In re-assembling see that each set screw "C" is properly located in the seat provided for it in the conduit pipe.

SERIAL NUMBER AND REPAIR PARTS

Should it be necessary to order repair parts, always give the serial number. This number is stamped on the machine at the outer end of the arm rack spacing bar. (See page 18).

Because it is impossible to obtain correct dimensions from original parts that have been worn, it is seldom advisable to make your own repair parts.

As a rule, no changes should be made in the design of any part of the machine or in any of the materials used. What may appear to be an improvement on certain parts, may lead to serious trouble on other parts. The Cincinnati Bickford Tool Company has an accurate record of all of the parts on your SUPER SERVICE Radial and can supply them on short notice. On the following pages photographs of the various parts are reproduced to assist you in ordering repair parts. If you cannot find the part desired, tell us where it is and what it does. But always give the serial number of your machine and when possible the part number and part name as listed in the following pages. Also specify the quantity required.

PARTS LIST

NOTE: Be sure to give the serial number of your machine when ordering parts.

For location of serial number see page 18.

***When ordering BEARINGS give Manufacturer's NAME and NUMBER**

FRAME PARTS

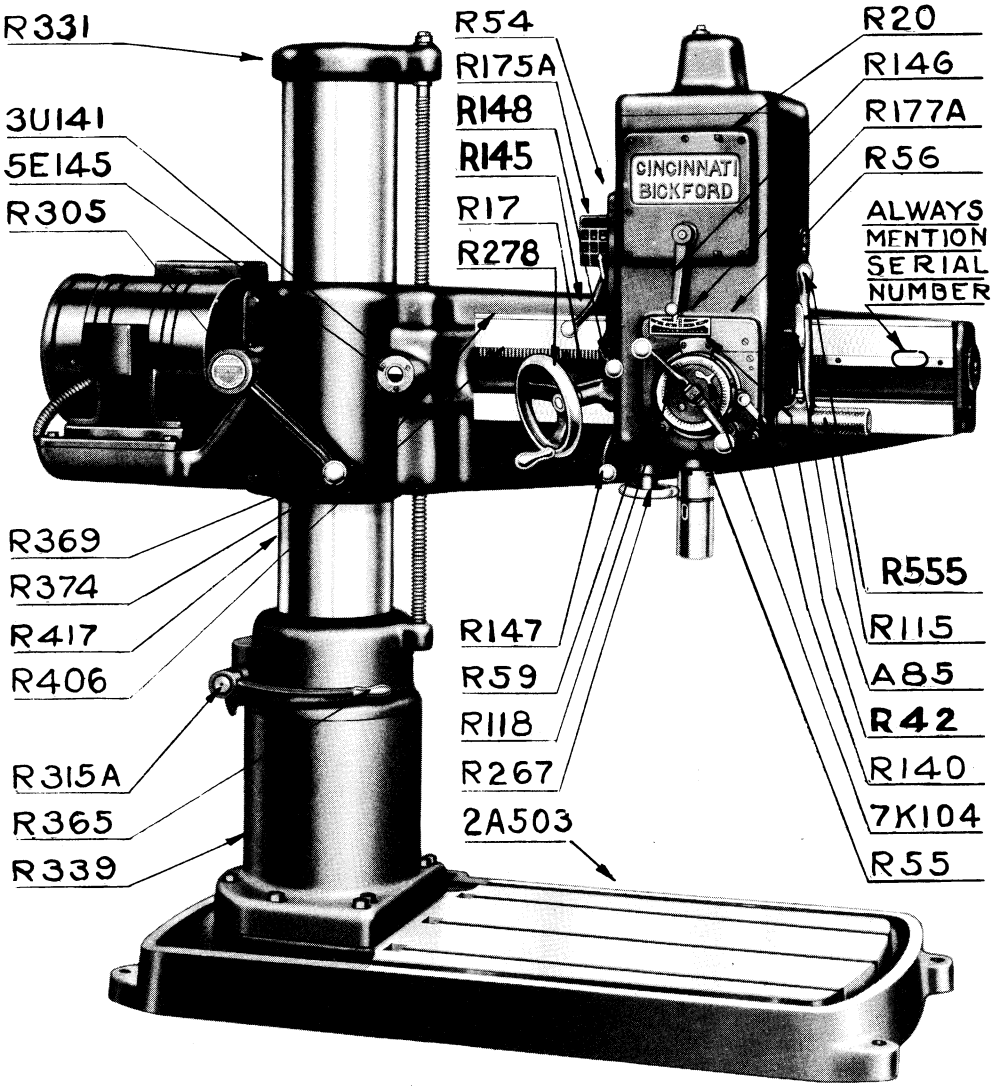

PART NO.	PART NAME	PART NO.	PART NAME	PART NO.	PART NAME
R- 17	Head Moving Bracket	R-140	Dial Clamp Lever	R-305	Mono Lever Guide Bearing
R- 20	Feed Bracket	3-U-141	Oil Gauge Glass Washer	R-315-A	Sleeve Clamping Bolt
R- 42	Feed Dial Large Clamp	R-145	Speed Change Lever	R-331	Column Cap
R- 54	Head Side Cover	5-E-145	Oil Gauge Glass	R-339	Column
R- 55	Large Lower Head Cover	R-146	Feed Change Lever	R-365	Sleeve Clamping Lever
R- 56	Small Lower Head Cover	R-147	Control Lever	R-369	Mono Control Lever
R- 59	Feed Depth Gauge Dial	R-148	Head Clamping Lever	R-374	Arm Way Liner
A- 85	Ratchet Lever Trigger	R-175-A	Speed Plate	R-406	Arm Rack
7-K-104	Q.R. Dial Pointer	R-177-A	Feed Plate	R-417	Column Sleeve
R-115	Arm Swinging Handle	R-267	Feed Hand Wheel	2-A-503	Base
R-118	Quick Return Head	R-278	Head Moving Hand Wheel	R-555	Feed Ratchet Lever

***When ordering BEARINGS give Manufacturer's NAME and NUMBER**

FRAME PARTS

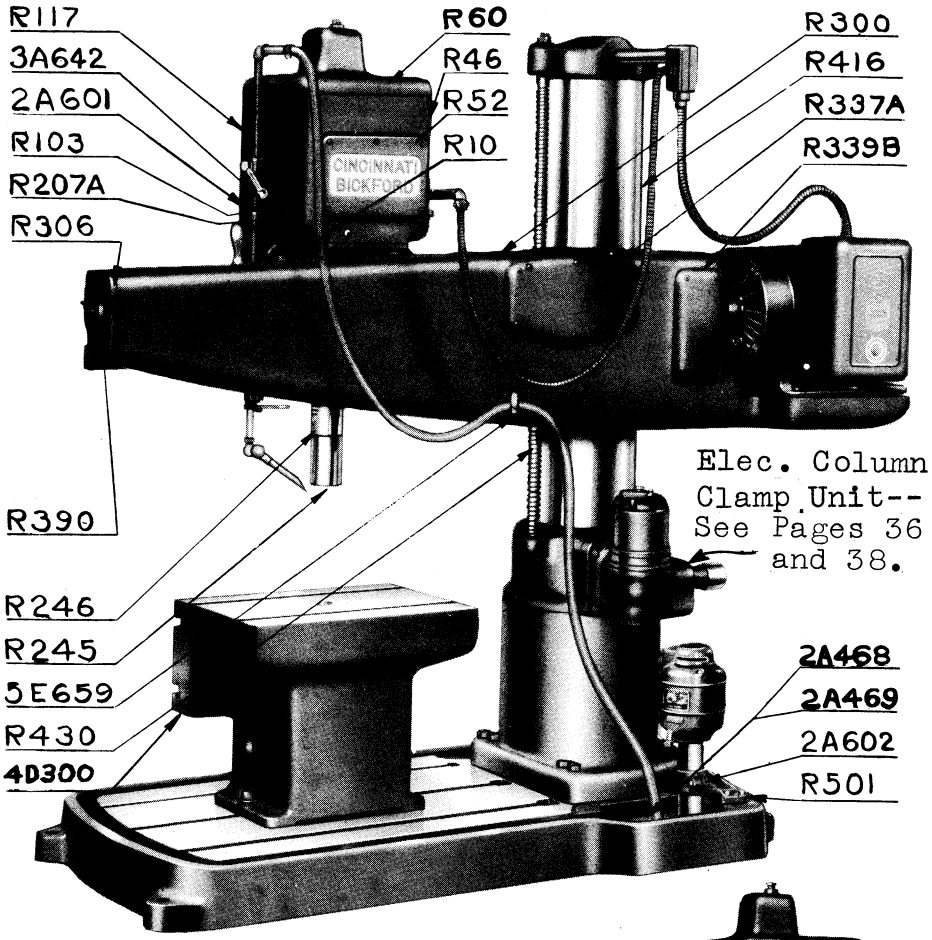

Elec. Column Clamp Unit-- See Pages 36 and 38.

PART NO.	PART NAME
R- 10	Bearing
R- 46	Back Gear Case
R- 52	Head Rear Cover
R- 60	Head Top Cover
R-103	Oil Gauge Glass
R-117	Head
R-207-A	Oil Gauge Glass Retainer
R-245	Spindle
R-246	Spindle Sleeve
R-300	3 Ft. Arm
4-D-300	Box Table
R-306	Bearing
R-337-A	Arm Cover
R-339-B	Motor Case Arm Cover
R-390	Arm End Plate
R-416	Column Sleeve
R-430	Elevating Screw
2-A-468	Base R. H. Strainer
2-A-469	Base L. H. Strainer
R-501	Pump Bracket
2-A-601	Pipe Bracket
2-A-602	Pump Bracket Cap
3-A-642	Pipe Bracket Clamp Lever
5-E-659	Eye Bolt

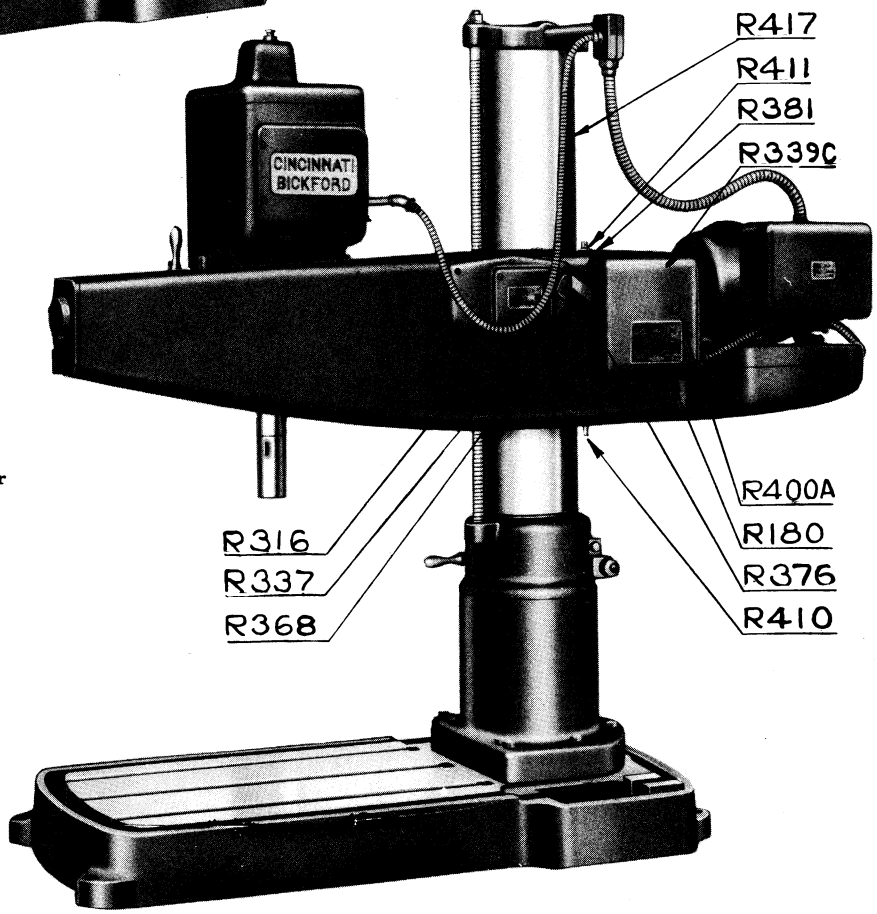

PART NO.	PART NAME
R-180	Oiling Chart Plate
R-316	Elevating Bracket
R-337	Arm Elev. Clutch Cover
R-339-C	Motor Case Arm Cover
R-368	Short Clutch Lever
R-376	Clutch Link
R-381	Limit Trip Spring Nut
R-400-A	Motor Case Pipe
R-410	Limit Trip Rod
R-411	Limit Trip Spring Rod
R-417	Column Sleeve

***When ordering BEARINGS give Manufacturer's NAME and NUMBER**

COLUMN AND SLEEVE PARTS - MOTOR-GEARING AND ARM SHAFT

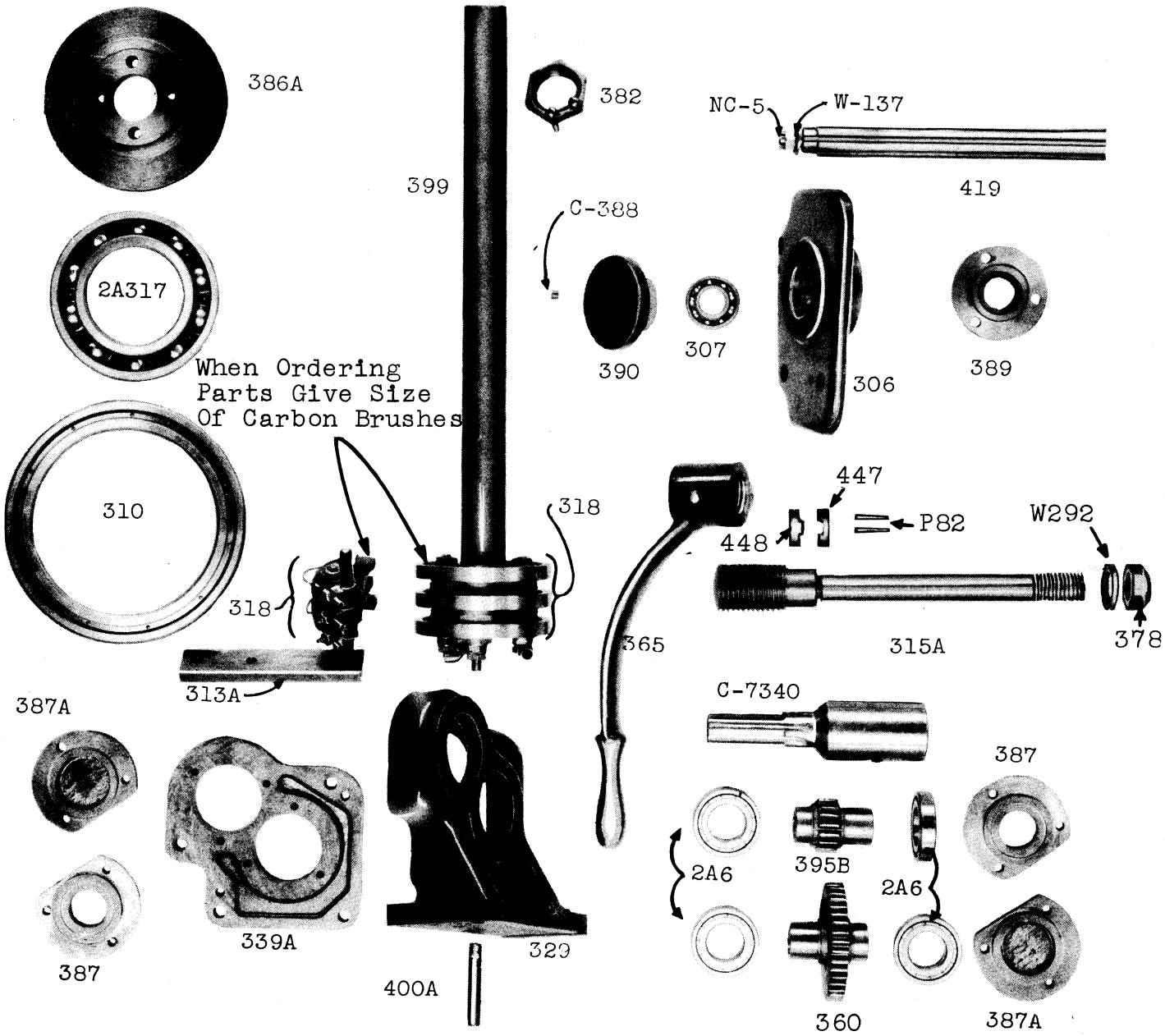

PART NO.	PART NAME	PART NO.	PART NAME	PART NO.	PART NAME
N-C- 5	Lock Nut	318	Collector Ring Assembly	389	Arm End Bearing Plate
2-A- 6	Bearing	329	Motor Gear Case	390	Arm End Bearing End Plate
P- 82	Taper Pins	339-A	Motor Gear Case Cover	395-B	Motor Pinion
W-137	Washer (Std.)	360	Motor Gear	399	Conduit Pipe
W-292	Washer (Std.)	365	Sleeve Clamping Lever	400-A	Motor Case Pipe
306	Bearing	378	Bolt Lock Nut	410-A	Brush (Collector Ring) Rod
307	Bearing	382	Conduit Pipe Lock Nut	419	Arm Shaft
310	Bearing	386-A	Column Sleeve Thrust Plate	447	Bolt Lock Washer
313-A	Brush Rod Bracket	387	Motor Gear Case End Plate	448	Clamp Lever Washer
315-A	Sleeve Clamping Bolt	387-A	Motor Case Cover End Plate	C-7340	Motor Coupling
2-A-317	Bearing	C-388	Pipe Plug		

***When ordering BEARINGS give Manufacturer's NAME and NUMBER**

ARM CLAMPING AND ELEVATING PARTS

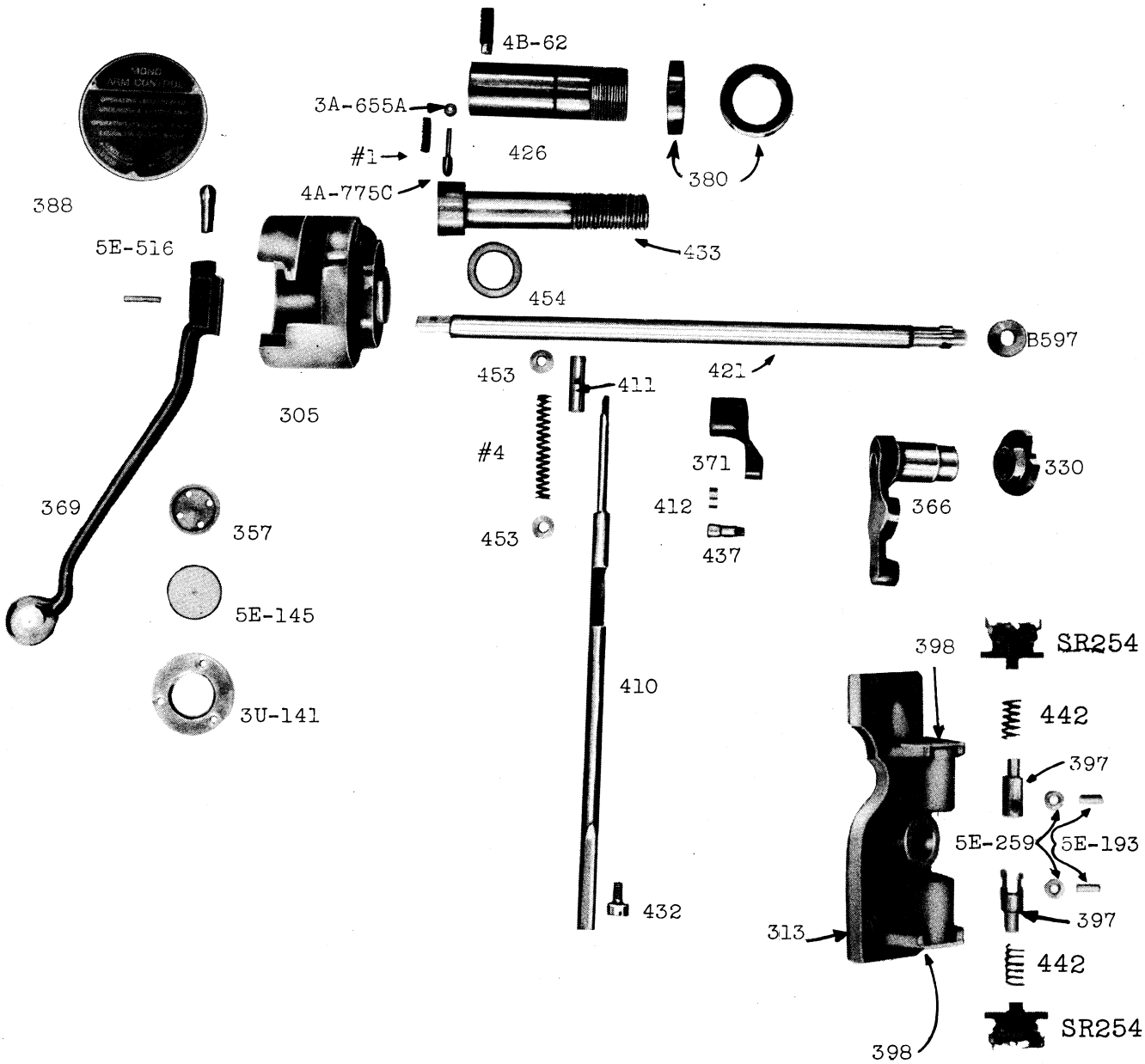

PART NO.	PART NAME	PART NO.	PART NAME	PART NO.	PART NAME
#1	Spring	366	Elev. Switch Bracket Lever	432	Limit Trip Rod Screw
#4	Spring	369	Mono Control Lever	433	Arm Clamp Nut Screw
4-B- 62	Clamp Nut Sleeve Screw	371	Limit Trip Lever	437	Limit Trip Roller Stud
3-U-141	Oil Gauge Glass Washer	380	Arm Clamp Nut	442	Switch Cam Guide Spring
5-E-145	Oil Gauge Glass	388	Mono Arm Control Plate	453	Limit Trip Rod Washer
5-E-193	Plunger Roller Pin	397	Elev. Switch Cam Plunger	454	Mono Clamp Washer
5-R-254	Reverse Switch	398	Elev. Switch Plate	5-E-516	Lever Pivot Pin
5-E-259	Switch Plunger Roller	410	Limit Trip Rod	B-597	Shifter Shaft Collar
305	Mono Lever Guide Bearing	411	Limit Trip Spring Rod	3-A-655-A	Mono Guide Bearing Plunger Screw
313	Elev. Switch Bracket	412	Limit Trip Roller	4-A-775-C	Mono Guide Bearing Plunger
330	Elev. Switch Cam	421	Elev. Clutch Shifter Shaft		
357	Oil Gauge	426	Arm Clamp Nut Sleeve		

***When ordering BEARINGS give Manufacturer's NAME and NUMBER**

ARM ELEVATING PARTS

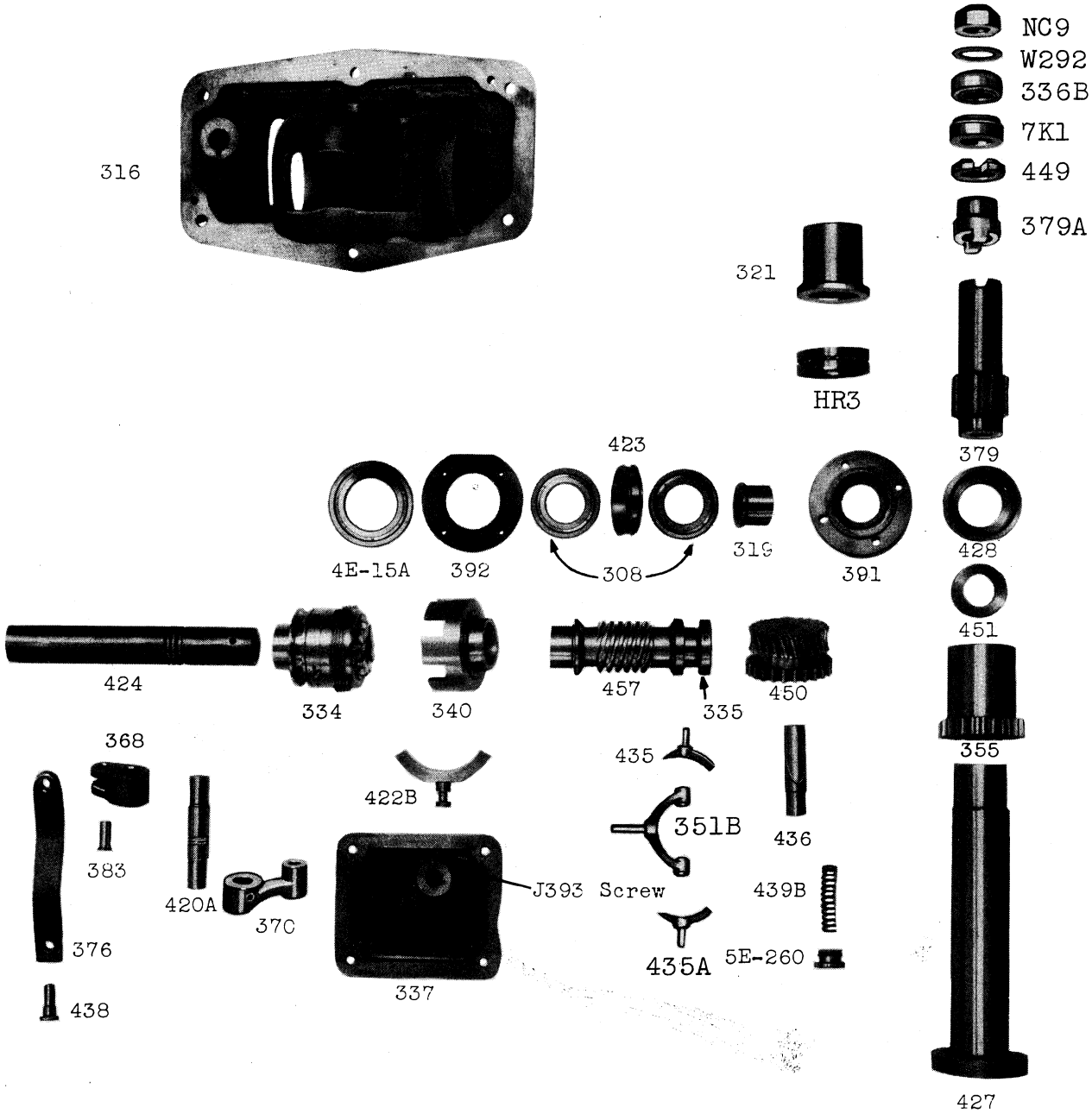

PART NO.	PART NAME	PART NO.	PART NAME	PART NO.	PART NAME
7-K- 1	Thrust Bearing	340	Elev. Worm Clutch Cup	423	Arm Shaft Rear Bearing Spacer
H-R- 3	Cap Thrust Bearing	351-B	Shifter Fork	424	Arm Shaft Oil Sling
N-C- 9	Nut (Std.)	355	Elev. Nut Gear	427	Elev. Nut Gear Sleeve
4-E- 15-A	Bearing	368	Short Clutch Lever	428	Elev. Nut Oil Sling
5-E-260	Plunger Screw	370	Elev. Clutch Shifter Lever	435	Upper Clutch Shifter
W-292	Washer (Std.)	376	Clutch Link	435-A	Lower Shifter
308	Bearing	379	Elevating Nut	436	Elev. Bracket Stud
316	Elevating Bracket	379-A	Safety Nut	438	Clutch Link Stud
319	Arm Shaft Rear Bearing Bush	383	Clutch Link Pin	439-B	Clutch Brake Shoe Spring
321	Elev. Nut Bearing Bush	391	Elev. Bracket Outside Plate	449	Screw Slip Washer
334	Elevating Clutch	392	Elev. Bracket Inside Plate	450	Elev. Worm Wheel
335	Elevating Worm Collar	J-393	Dog Point Screw	451	Elev. Nut Gear Washer
336-B	Elev. Screw Collar	420-A	Clutch Lever Shaft	457	Elev. Clutch Worm
337	Arm Elev. Clutch Cover	422-B	Clutch Brake Shoe		

***When ordering BEARINGS give Manufacturer's NAME and NUMBER**

FEED CASE UNIT

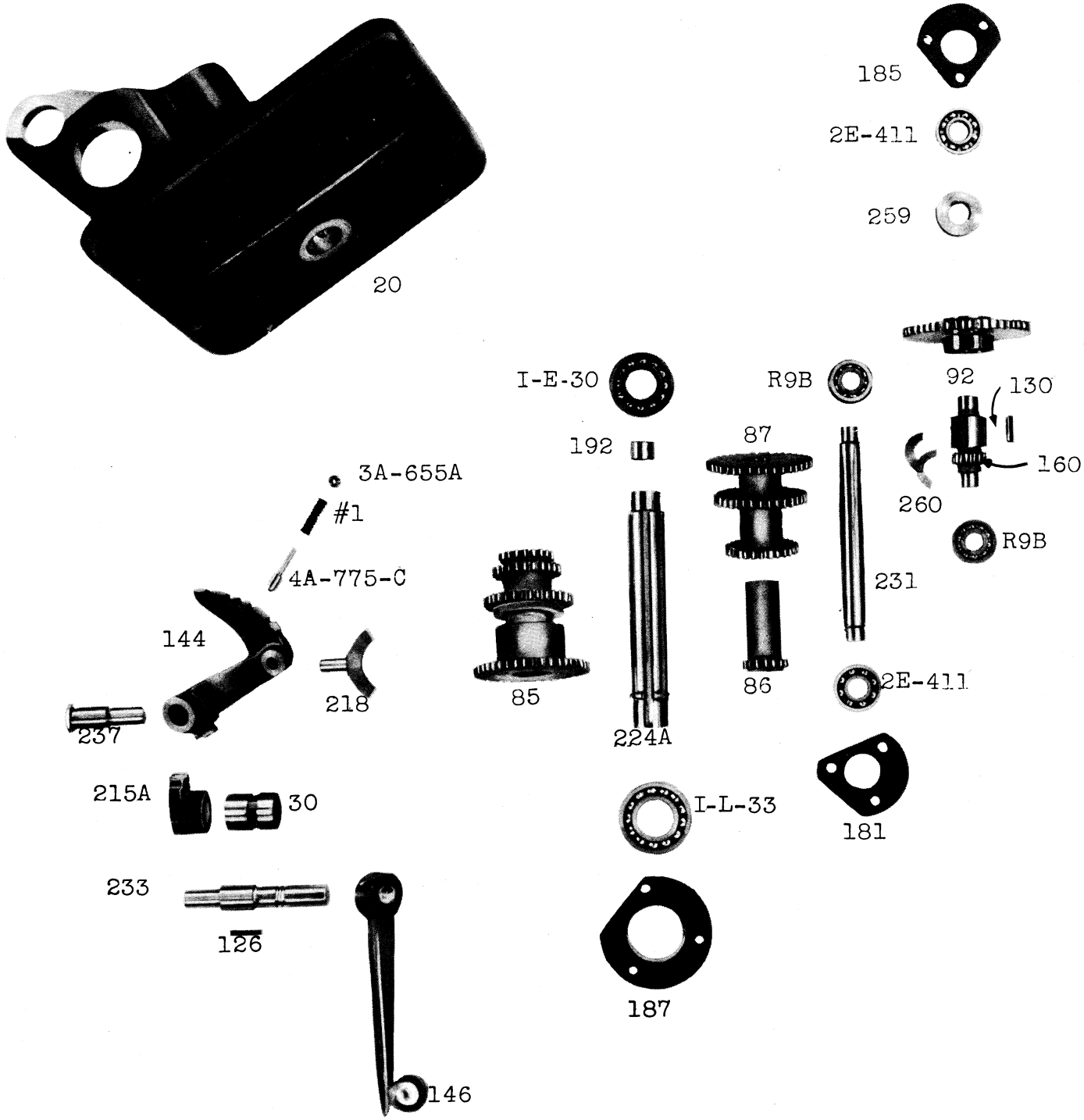

PART NO.	PART NAME
#1	Spring
R- 9-B	Bearing
20	Feed Bracket
30	Feed Change Lever Bush
I-E- 30	Bearing
I-L- 33	Bearing
85	Feed Sliding Gear
86	17T Inter. Feed Gear
87	27T-35 & 40T Inter. Feed Gear
92	Main Feed Gear

PART NO.	PART NAME
126	Feed Change Shaft Key
130	Main Feed Gear Key
144	Feed Shifter Lever
146	Feed Change Lever
160	12T Main Feed Pinion
181	Inter. Feed Bearing Plate
185	Main Feed Bearing Plate
187	Feed Bracket Bearing Plate
192	Sliding Feed Gear Sleeve Plug
215-A	Feed Shifter Lever Segment

PART NO.	PART NAME
218	Feed Sliding Gear Shifter
224-A	Sliding Feed Gear Sleeve
231	Inter. Feed Shaft
233	Feed Change Lever Shaft
237	Feed Shifter Lever Stud
259	Main Feed Gear Washer
260	Main Feed Gear Split Washer
2-E-411	Bearing
3-A-655-A	Plunger Screw
4-A-775-C	Plunger

***When ordering BEARINGS give Manufacturer's NAME and NUMBER**

SPINDLE AND SPINDLE DRIVING PARTS

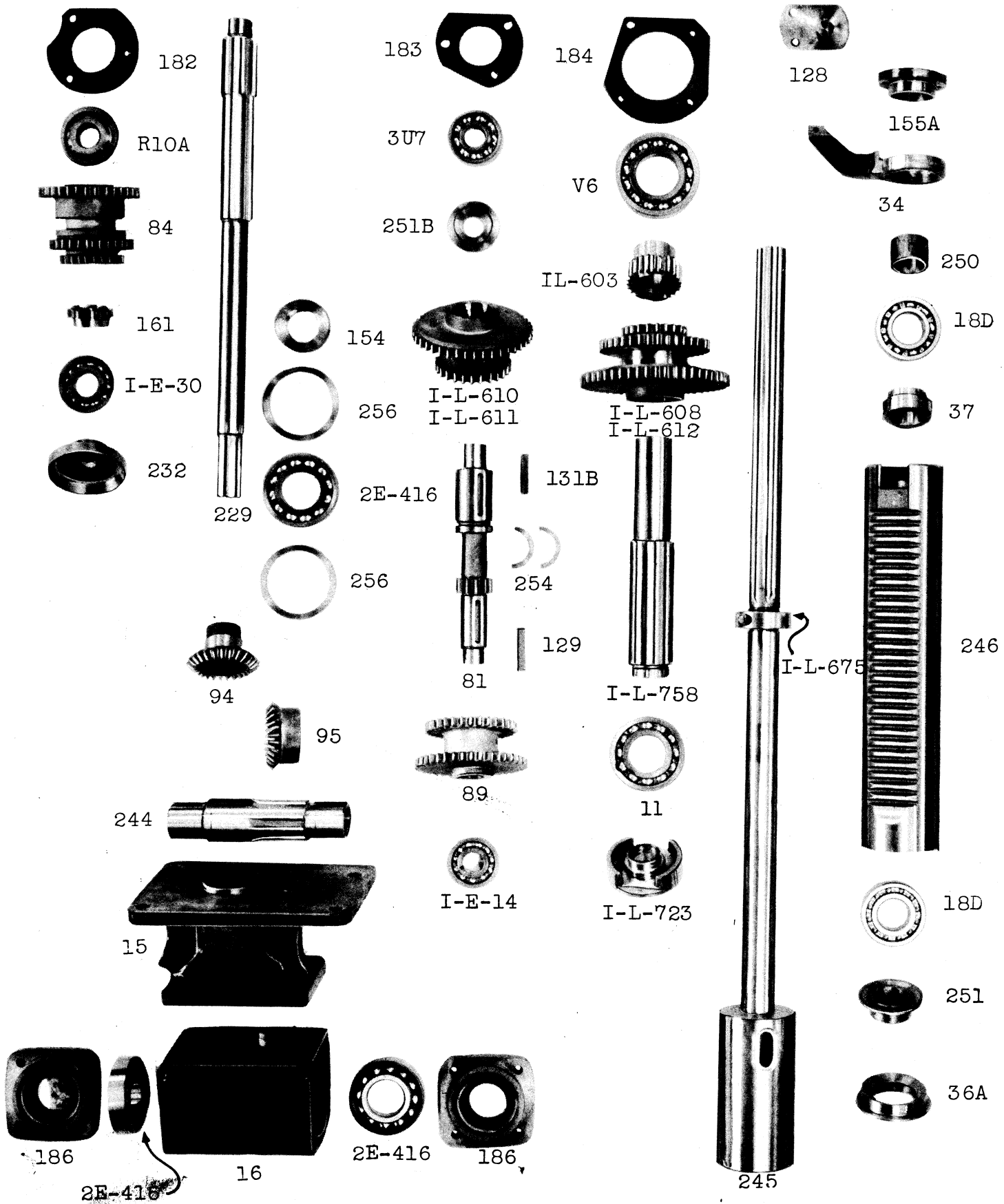

***When ordering BEARINGS give Manufacturer's NAME and NUMBER**

SPINDLE AND SPINDLE DRIVING PARTS

PART NO.	PART NAME
V- 6	Bearing
3-U- 7	Bearing
R- 10-A	Bearing
11	Bearing
I-E- 14	Bearing
15	Driving Bevel Gear Bracket
16	Arm Mitre Sleeve Bracket
18-D	Bearing (2 req.)
I-E- 30	Bearing
34	Chain Carrier
36-A	Lower Spindle Grease Collar
37	Upper Spindle Grease Collar
81	12T Interm. Driving Gear
84	21-28 & 34T Sliding Driving Gear
89	32T & 39T Inter. Driving Gear
94	25T Driving Mitre Gear
95	25T Arm Shaft Mitre Gear
128	Spindle Sleeve Key
129	Inter. Shaft Key
131-B	Inter. Shaft Key
154	Driving Mitre Gear Nut
155-A	Chain Carrier Lock Nut
161	Pump Driving Pinion
182	Mitre Shaft Bearing Plate
183	Inter. Driving Shaft Bearing Plate
184	Spindle Bearing Plate
186	Mitre Sleeve Bracket Plate
229	Driving Mitre Shaft
232	Mitre Shaft Oil Sling
244	Arm Mitre Gear Sleeve
245	Spindle
246	Spindle Sleeve
250	Spindle Upper Bearing Spacer
251	Spindle Lower Bearing Spacer
251-B	Inter. Shaft Bearing Spacer
254	Inter. Shaft Washer
256	Driving Mitre Bearing Washer
2-E-416	Bearing
I-L-603	Spindle Feed Gear
I-L-608, I-L-612	Spindle Sliding Gear Assembly
I-L-610, I-L-611	26T & 42T Inter. Driving Gear Assembly
I-L-675	Spindle Jam Nut
I-L-723	Head Upper Bearing Bush
I-L-758	Spindle Driving Sleeve

***When ordering BEARINGS give Manufacturer's NAME and NUMBER**

HEAD PARTS - SPEED CHANGE SHIFTERS

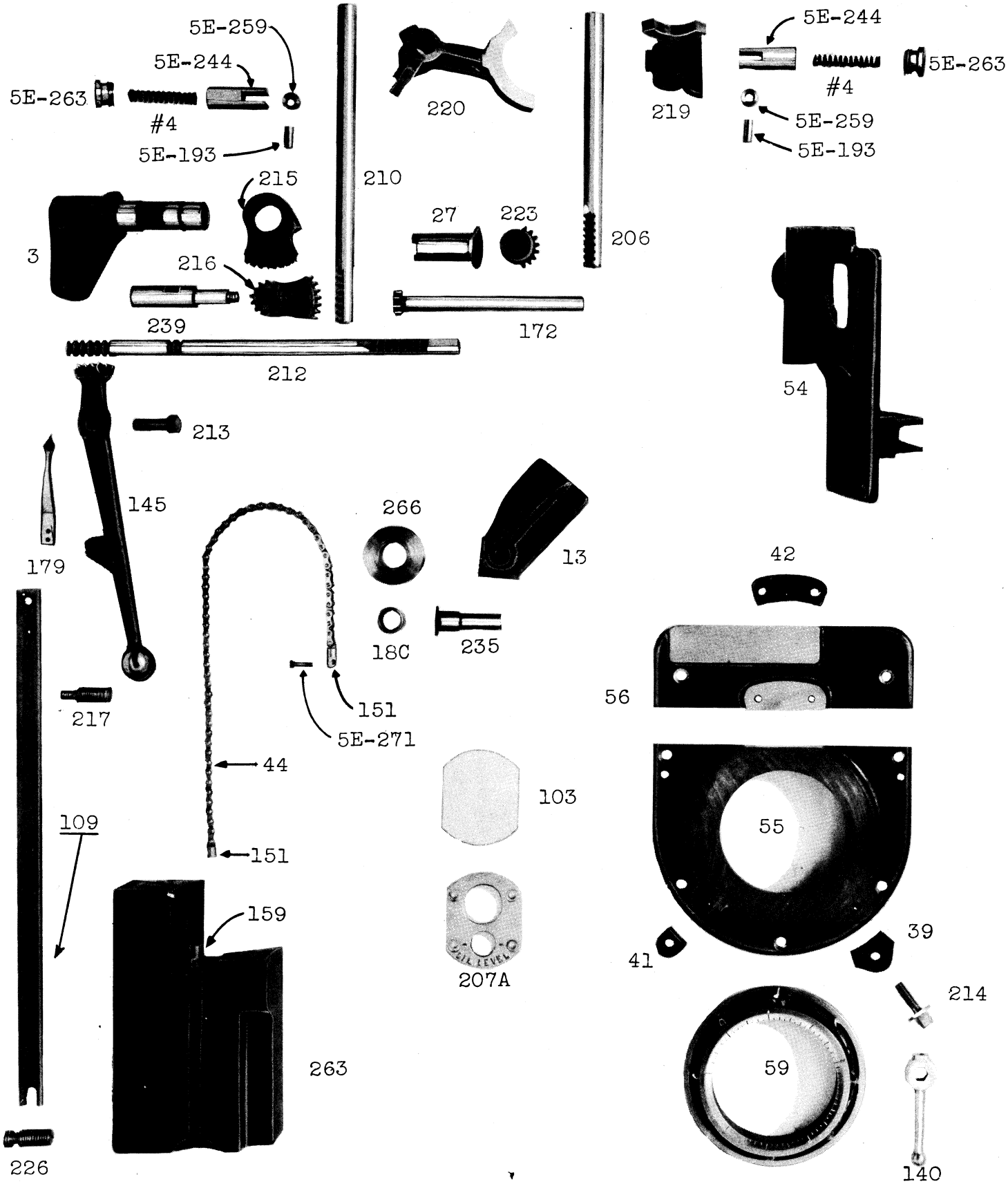

***When ordering BEARINGS give Manufacturer's NAME and NUMBER**

HEAD PARTS - SPEED CHANGE SHIFTERS

PART NO.	PART NAME
3	Speed Change Lever Bearing
#4	Spring
13	Large Sheave Wheel Bracket
18-C	Bearing
27	B. G. Shifter Pinion Bush
39	Feed Dial Lever Clamp
41	Feed Dial Small Clamp
42	Feed Dial Large Clamp
44	Lower Counterweight Chain
54	Head Side Cover
55	Large Lower Head Cover
56	Small Lower Head Cover
59	Feed Depth Gauge Dial
103	Oil Gauge Glass
109	Counterweight Guide
140	Dial Clamp Lever
145	Speed Change Lever
151	Chain Connecting Link
159	Counterweight Pin
172	Back Gear Shifter Pinion
179	Speed Pointer
5-E-193	Plunger Roller Pin
206	B. G. Vertical Shifter Rod
207-A	Oil Gauge Glass Retainer
210	Spindle Vertical Shifter Rod
212	B. G. Horizontal Shifter Rod
213	Speed Change Bearing Screw
214	Dial Clamping Screw
215	Spindle Gear Segment
216	Spindle Gear Shifter Segment
217	Upper Counterweight Guide Screw
219	Back Gear Shifter
220	Spindle Gear Shifter
223	B. G. Shifter Segment
226	Lower Counterweight Guide Screw
235	Large Sheave Wheel Stud
239	Spindle Gear Shifter Segment Stud
5-E-244	Shifter Lever Plunger
5-E-259	Plunger Roller
263	Counter Weight
5-E-263	Plunger Screw
266	Large Sheave Wheel
5-E-271	Counterweight Link Screw

***When ordering BEARINGS give Manufacturer's NAME and NUMBER**

HEAD PARTS

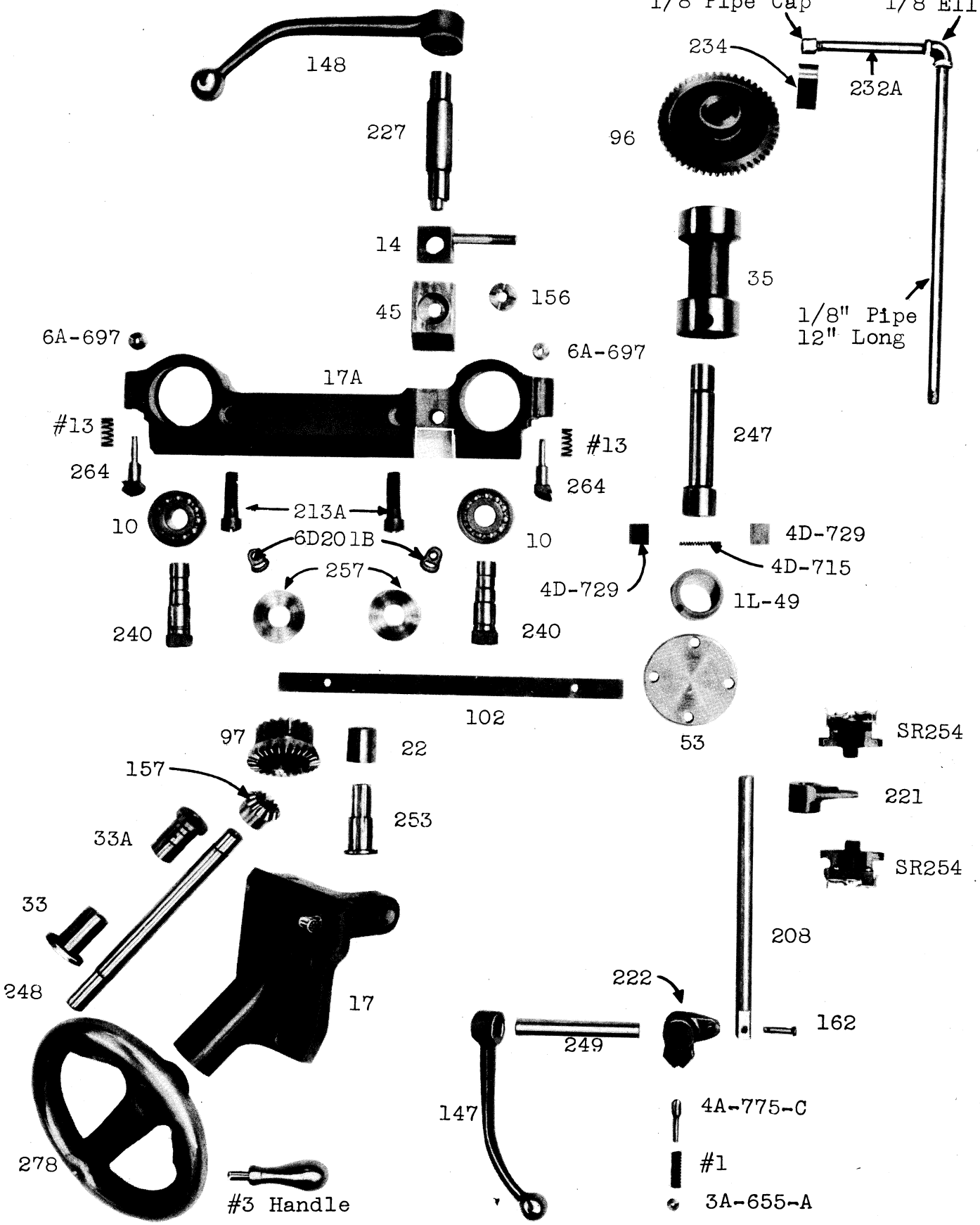

***When ordering BEARINGS give Manufacturer's NAME and NUMBER**

HEAD MOVING AND CLAMPING PARTS
HEAD OILING PUMP

PART NO.	PART NAME
#1	Spring
#3	Handle
10	Bearing
#13	Spring
14	Head Clamping Bolt
17	Head Moving Bracket
17-A	Head Clamp Bracket
22	Head Moving Pinion Bush
33	Hand Wheel Bracket Front Bush
33-A	Hand Wheel Bracket Rear Bush
35	Pump Case
45	Head Clamp
1-L- 49	Pump Eccentric Bush
53	Pump Case Cover
96	50T Pump Driving Gear
97	Head Moving Bevel Gear
102	Lower Head Gib
147	Control Lever
148	Head Clamping Lever
156	Head Clamp Nut
157	Head Moving Bevel Pinion
162	Control Switch Segment Pin
6-D-201-B	Lock Plates
208	Control Switch Vertical Rod
213-A	Head Clamp Bracket Screw
221	Control Switch Shifter
222	Control Switch Segment
227	Head Clamping Shaft
232-A	Head Oiling Spout
234	Pipe Strap
240	Head Moving Ball Bearing Stud
247	Pump Shaft
248	Head Handwheel Shaft
249	Control Lever Shaft
253	Head Moving Pinion Stud
S-R-254	Reverse Switch
257	Head Moving Stud Washer
264	Arm Way Liner Wiper
278	Head Moving Hand Wheel
3-A-655-A	Plunger Screw
6-A-697	Head Clamp Plunger Screw
4-D-715	Pump Wing Spring
4-D-729	Pump Wing
4-A-775-C	Shifter Plunger

***When ordering BEARINGS give Manufacturer's NAME and NUMBER**

QUICK RETURN PARTS
HAND FEED PARTS

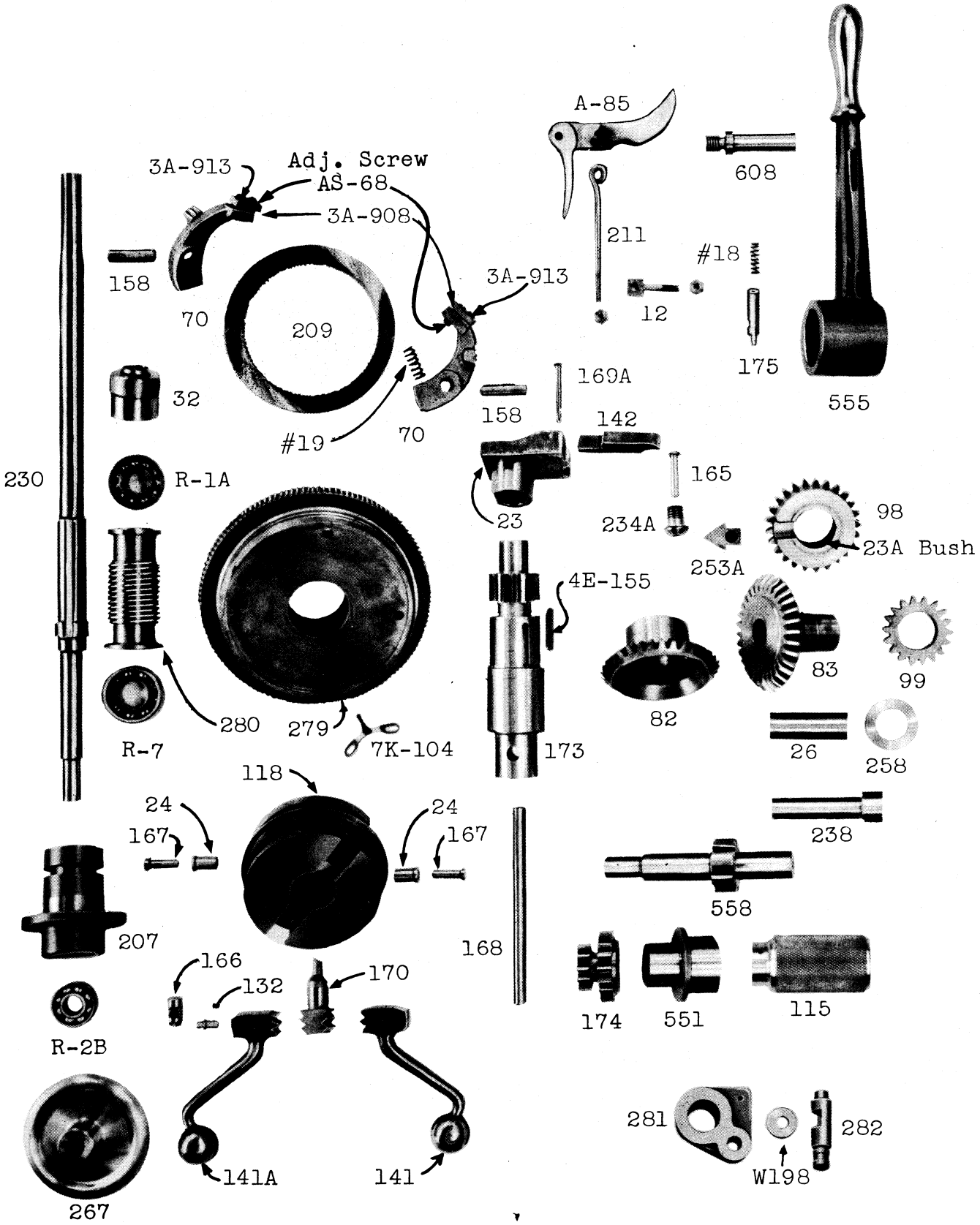

***When ordering BEARINGS give Manufacturer's NAME and NUMBER**

QUICK RETURN PARTS - HAND FEED PARTS

PART NO.	PART NAME
R- 1-A	Bearing
R- 2-B	Bearing
R- 7	Bearing
12	Lever Plunger Eye Bolt
#18	Spring
#19	Spring
23	Safety Trip Lever Bush
23-A	Spindle Limit Trip Gear Bush
24	Quick Return Clutch Pin Bush
26	Ratchet Mitre Gear Bush
32	Feed Worm Shaft Oil Return Bush
A-S- 68	Adjusting Screws
70	Quick Return Clutch Finger
82	32T Feed Mitre Gear
83	Ratchet Mitre Gear
A- 85	Ratchet Lever Trigger
98	Spindle Limit Trip Gear
99	18T Ratchet Gear
7-K-104	Quick Return Dial Pointer
115	Arm Swinging Handle
118	Quick Return Head
132	Feed Trip Knob
141	Quick Return Lever
141-A	Quick Return Lever
142	Safety Trip Lever
4-E-155	Feed Rack Pinion Key
158	Quick Return Clutch Finger Pin
165	Limit Trip Pin
166	Feed Trip Pin
167	Quick Return Clutch Pin
168	Large Feed Limit Trip Pin
169-A	Safety Trip Lever Pin
170	Quick Return Clutch Spreader Pin
173	Feed Rack Pinion
174	18T Ratchet Pinion
175	Ratchet Plunger
W-198	Washer (Std.)
207	Feed Worm Bearing Retainer
209	Quick Return Clutch Ring
211	Pawl Connecting Rod
230	Feed Worm Shaft
234-A	Spindle Stop
238	32T Mitre Gear Stud
253-A	Spindle Limit Trip
258	Mitre Gear Matching Washer
267	Feed Hand Wheel
279	Worm Wheel
280	Feed Worm
281	Ratchet Safety Bracket
282	Ratchet Safety Pin
551	Feed Ratchet Lever Bush
555	Feed Stop
558	Feed Ratchet
608	Hand Lever Stop Pin
3-A-908	Clutch Adj. Lock Nut
3-A-913	Lock Nut Screw

***When ordering BEARINGS give Manufacturer's NAME and NUMBER**

AUTOMATIC TAPPING REVERSE

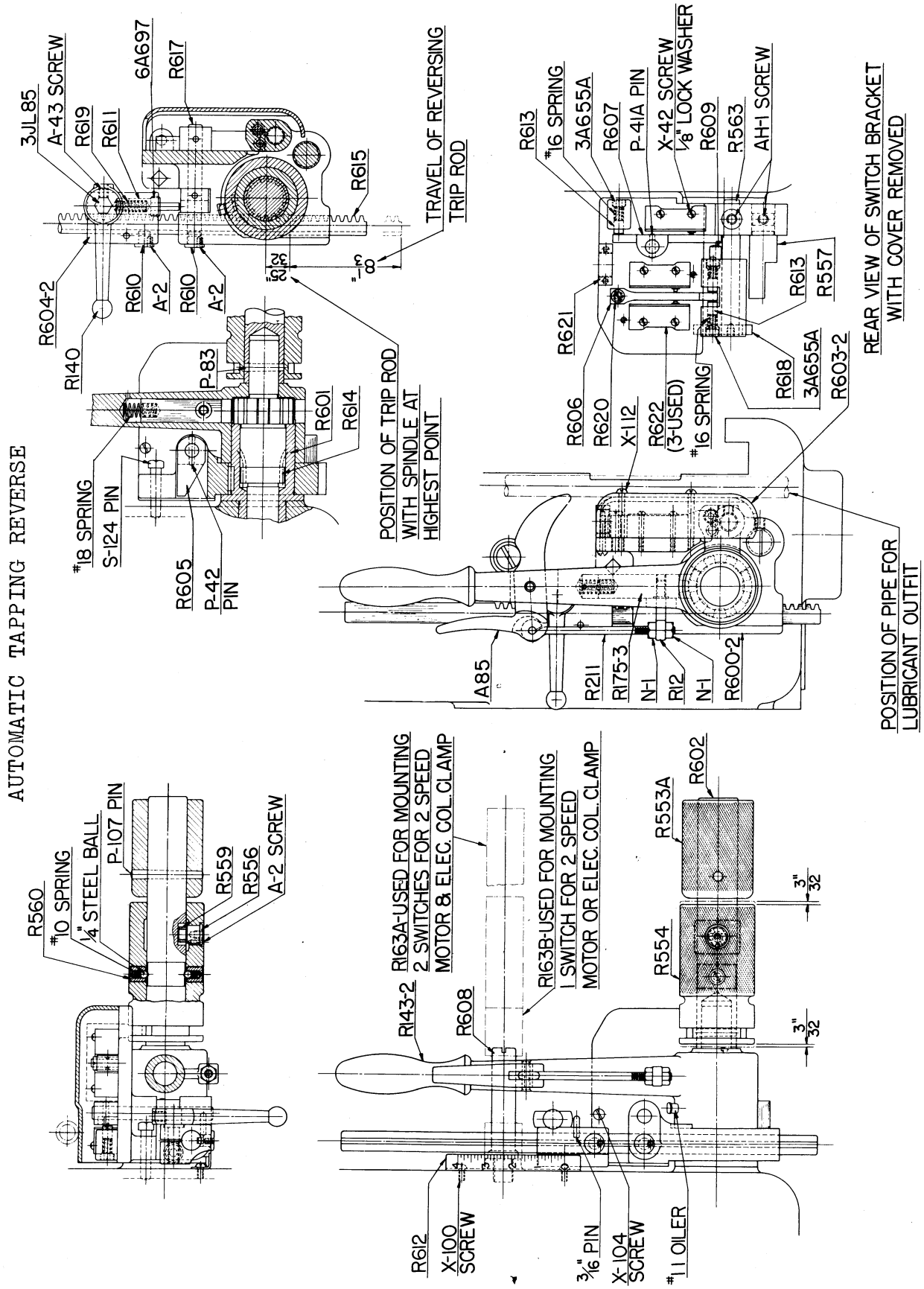

AUTO TAPPING REVERSE

PART NO.	PART NAME
R- 12	Lever Plunger Eye Bolt
A- 85	Hand Lever Trigger
3-J-L- 85	Dial Clamping Screw
R-140	Dial Clamp Lever
R-143-2	Feed Ratchet Lever
R-163-A	Hand Lever Stop Pin
R-163-B	Hand Lever Stop Pin
R-175- 3	Ratchet Plunger
R-211	Pawl Connecting Rod
R-553-A	Hand Feed Handle
R-554	Hand Feed Knob
R-556	Hand Feed Knob Roller Pin
R-557	Feed Ratchet Safety
R-559	Switch Cam Roller
R-560	Plunger Screw
R-563	Switch Shifter Stud
R-600- 2	Reversing Switch Bracket
R-601	Feed Ratchet Lever Bush
R-602	Hand Feed Cam
R-603- 2	Reversing Switch Cover
R-604- 2	Trip Dog
R-605	Depth Trip Lever
R-606	Reverse Switch Lever

PART NO.	PART NAME
R-607	Switch Shifter Lever
R-608	Hand Lever Stop Pin
R-609	Switch Shifter Pin
R-610	Trip Rod Guide Pin
R-611	Trip Pin
R-612	Depth Plate
R-613	Switch Shifting Lever Plunger
R-614	Feed Ratchet
R-615	Reversing Trip Rod
R-617	Depth Trip Shaft
R-618	Switch Shifter
R-619	Trip Pin Spring
R-620	Reversing Switch Lever Stud
R-621	Conduit Support
R-622	Reversing Switch
3-A-655-A	Plunger Screw
6-A-697	Plunger Screw

AUTOMATIC TAPPING CONTROL

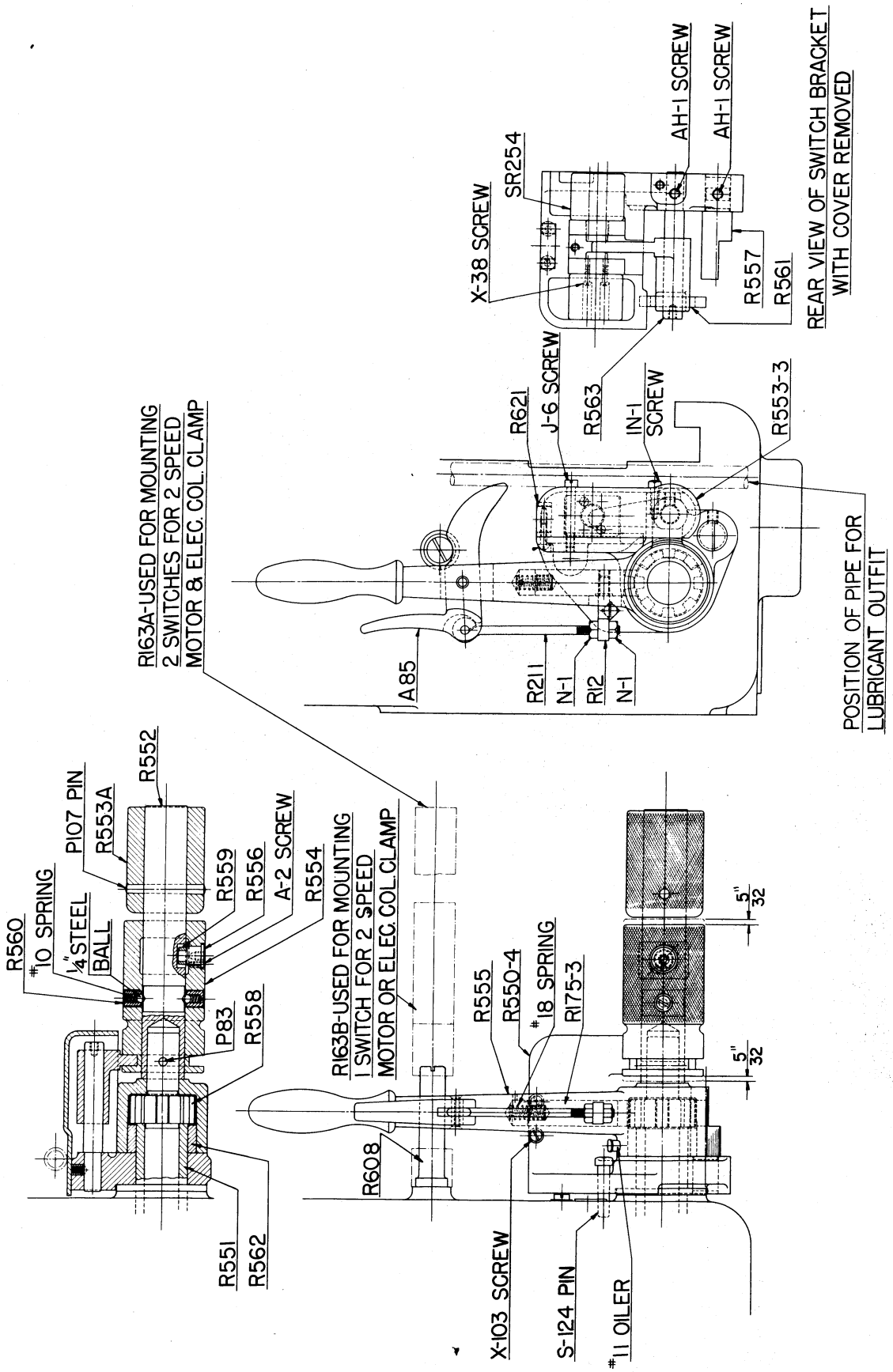

AUTO - TAPPING CONTROL

PART NO.	PART NAME
R- 12	Lever Plunger Eye Bolt
A- 85	Hand Lever Trigger
R-163-A	Hand Lever Stop Pin
R-163-B	Hand Lever Stop Pin
R-175- 3	Ratchet Plunger
R-211	Pawl Connecting Rod
S-R-254	Reversing Switch
R-550-4	Switch Bracket
R-551	Feed Ratchet Lever Bush
R-552	Feed Cam
R-553- 3	Switch Cover
R-553-A	Hand Feed Handle
R-554	Hand Feed Knob
R-555	Feed Ratchet Lever
R-556	Hand Feed Knob Roller Pin
R-557	Feed Ratchet Safety
R-558	Feed Ratchet
R-559	Switch Cam Roller
R-560	Plunger Screw
R-561	Switch Shifter
R-562	Feed Ratchet Lever Spacer
R-563	Switch Shifter Stud
R-608	Hand Lever Stop Pin
R-621	Conduit Support

ELECTRIC COLUMN CLAMP

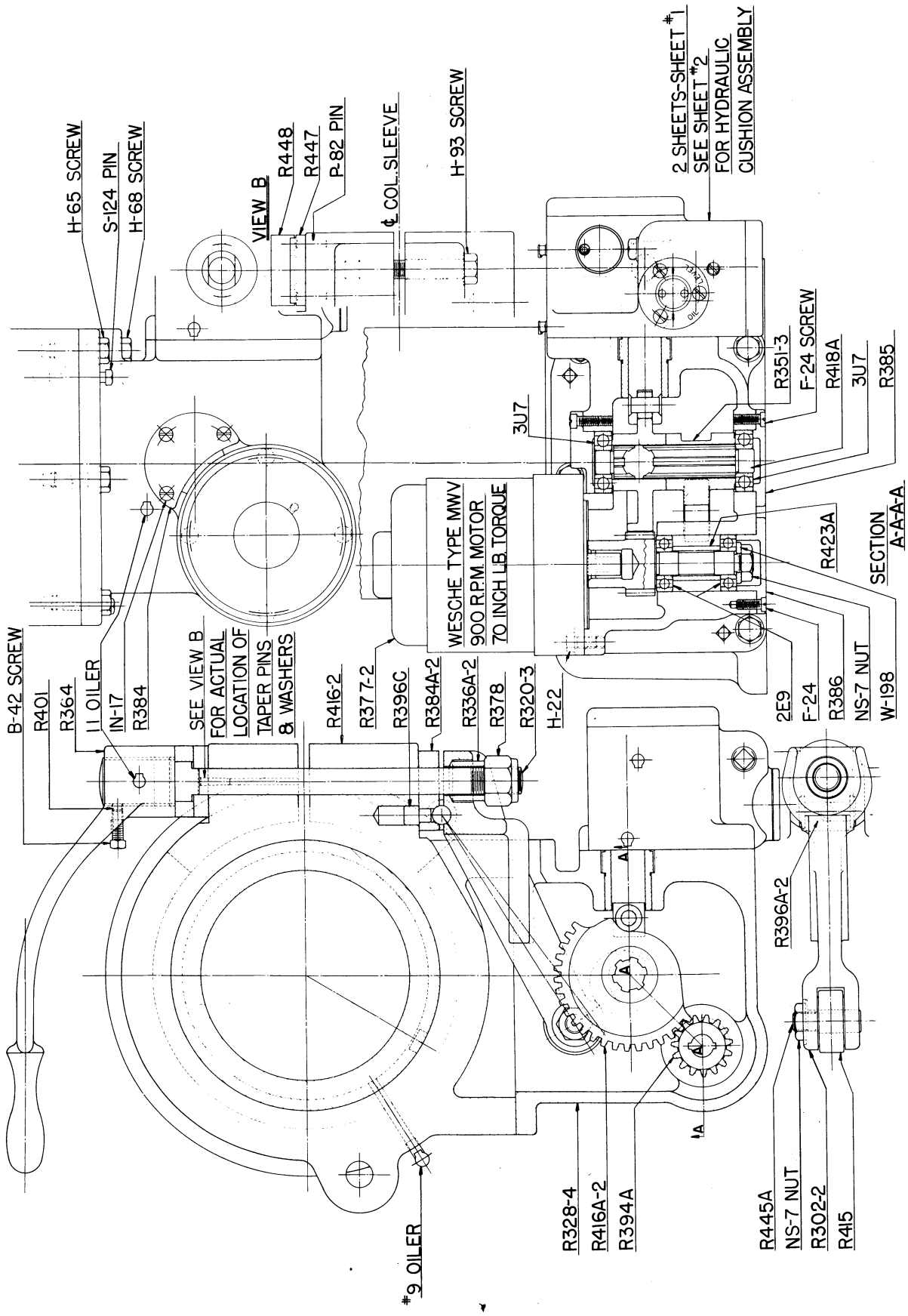

ELECTRIC COLUMN CLAMP

PART NO.	PART NAME
3-U- 7	Bearing
2-E- 9	Bearing
R-302-2	Clamping Arm
R-320-3	Clamping Bolt
R-328-4	Clamping Case
R-336-A-2	Clamp Bolt Spacing Collar
R-351-3	Clamp Eccentric
R-364	Column Sleeve Clamping Lever
R-377-2	Clamping Motor
R-378	Clamping Bolt Lock Nut
R-384	Clamp Case Upper Plate
R-384-A-2	Locking Plate
R-385	Clamp Case Lower (Rear) Plate
R-386	Clamp Case Lower (Front) Plate
R-394-A	Clamping Pinion
R-396-A-2	Arm Clamp Pivot
R-396-C	Locking Plate Pin
R-401	Clamping Lever Brass Plug
R-415	Clamp Arm Roller
R-416-2	Column Sleeve
R-416-A-2	Clamp Segment
R-418-A	Clamp Segment Shaft
R-423-A	Clamp Pinion Shaft Spacer
R-445-A	Clamp Roller Stud
R-447	Bolt Lock Washer
R-448	Clamp Lever Washer

HYDRAULIC CUSHION FOR COLUMN CLAMP

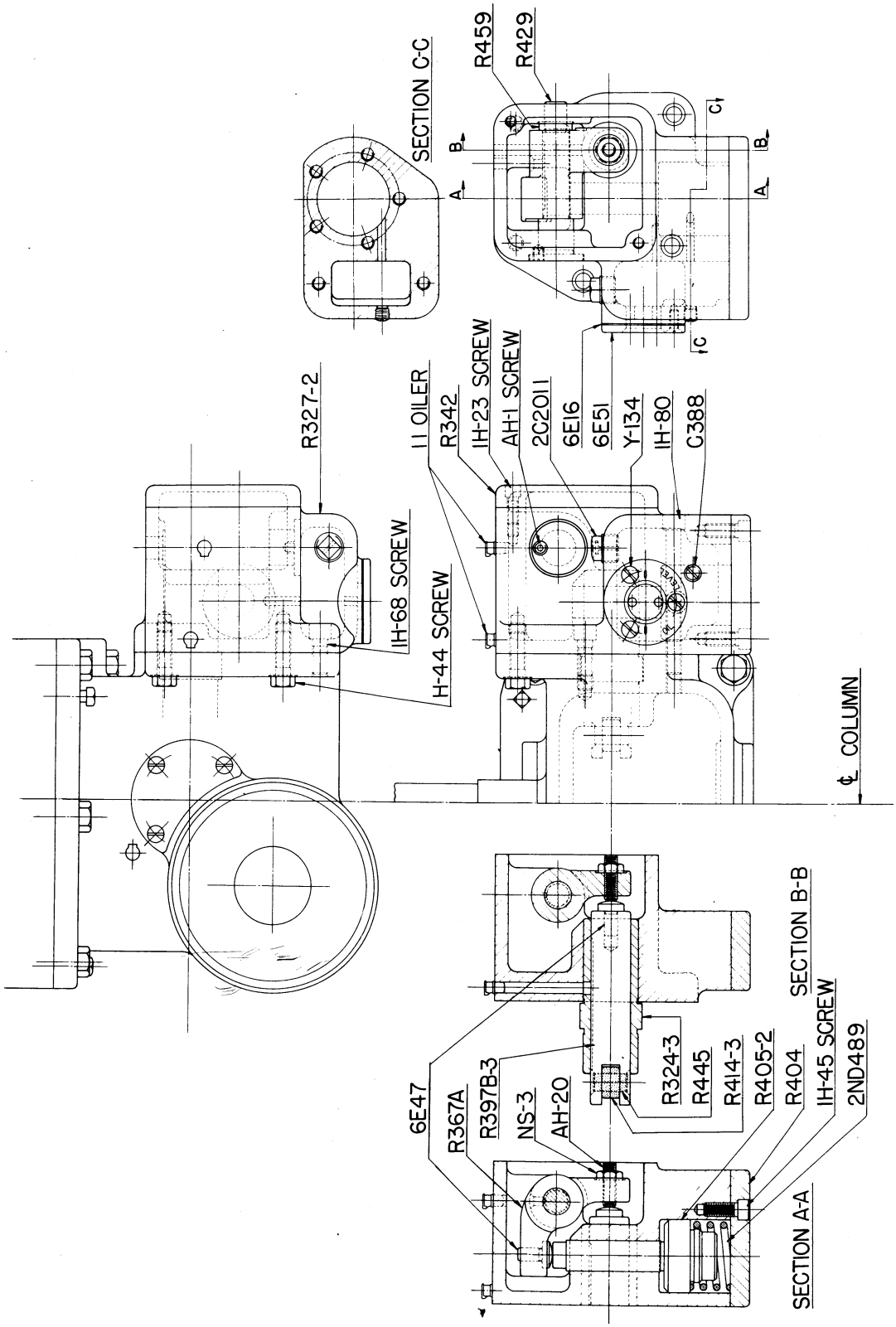

HYDRAULIC CUSHION FOR COLUMN CLAMP

PART NO.	PART NAME
6-E- 16	Oil Gauge Glass
6-E- 47	Clamping Segment Plug
6-E- 51	Oil Gauge Glass Retainer
R-324-3	Clamping Plunger Bush
R-327-2	Hydraulic Plunger Case
R-342	Hydraulic Case Cover
R-367-A	Plunger Lever
C-388	Pipe Plug
R-397 -B-3	Clamp Segment Plunger
R-404	Hydraulic Case Lower Plate
R-405-2	Clamp Spring Plunger
R-414-3	Clamp Plunger Shoe
R-429	Plunge Lever Shaft
R-445	Clamp Plunger Roller Stud
R-459	Lever Spacing Washer
2-N-D-489	Plunger Spring
2-C-2011	Fill Plug

BOOKLET R-23A

THE CINCINNATI BICKFORD TOOL COMPANY
OAKLEY, CINCINNATI, OHIO, U. S. A.

COPYRIGHT 1947

LITHO IN U. S. A.