Installation,

Operation and Maintenance

INSTRUCTIONS

and

PARTS LIST

for

Nos. 16L - 16M - 16S

VAN NORMAN
RAM TYPE MILLING MACHINES

Plain and Universal Models

VAN NORMAN MACHINE COMPANY

SPRINGFIELD 7, MASSACHUSETTS

Installation, Operation and Maintenance Instructions for

Nos. 16L - 16M - 16S

VAN NORMAN RAM TYPE MILLING MACHINES

Plain and Universal Models

The Nos. 16L, 16M and 16S Van Norman Ram Type Milling Machines are precision tools, built of the best material obtainable and to the highest degree of accuracy. Each machine and its parts are checked many times during construction for both quality and accuracy. With ordinary care and observance of the suggestions in this booklet your Model 16 Van Norman Ram Type Milling Machine will give you many years of satisfactory service.

In the general operation of these models it is important to note that the machine can be used for an exceptionally wide range of milling operations with the minimum of effort on the part of the operator.

In milling operations involved on most jobs where one or a few pieces are required, much time can be saved and the highest degree of accuracy will be assured, by keeping in mind at all times that your machine has as an important part of its design, a spindle which can be instantaneously adjusted to any angle between horizontal and vertical. Also, the spindle cutterhead is adjustable in or out with respect to the column by means of the ram on which it is mounted; thereby providing added range and adaptability to a wide range of milling operations with the minimum of changes in setups.

Before setting up the piece to be milled it is suggested that the operator carefully analyze the operations to be done in order to position the piece for most advantageous use of the horizontal, vertical and angular adjustments of the cutterhead as well as adjustability of the ram unit.

VAN NORMAN MACHINE COMPANY

Springfield 7, Mass., U. S. A.

INDEX

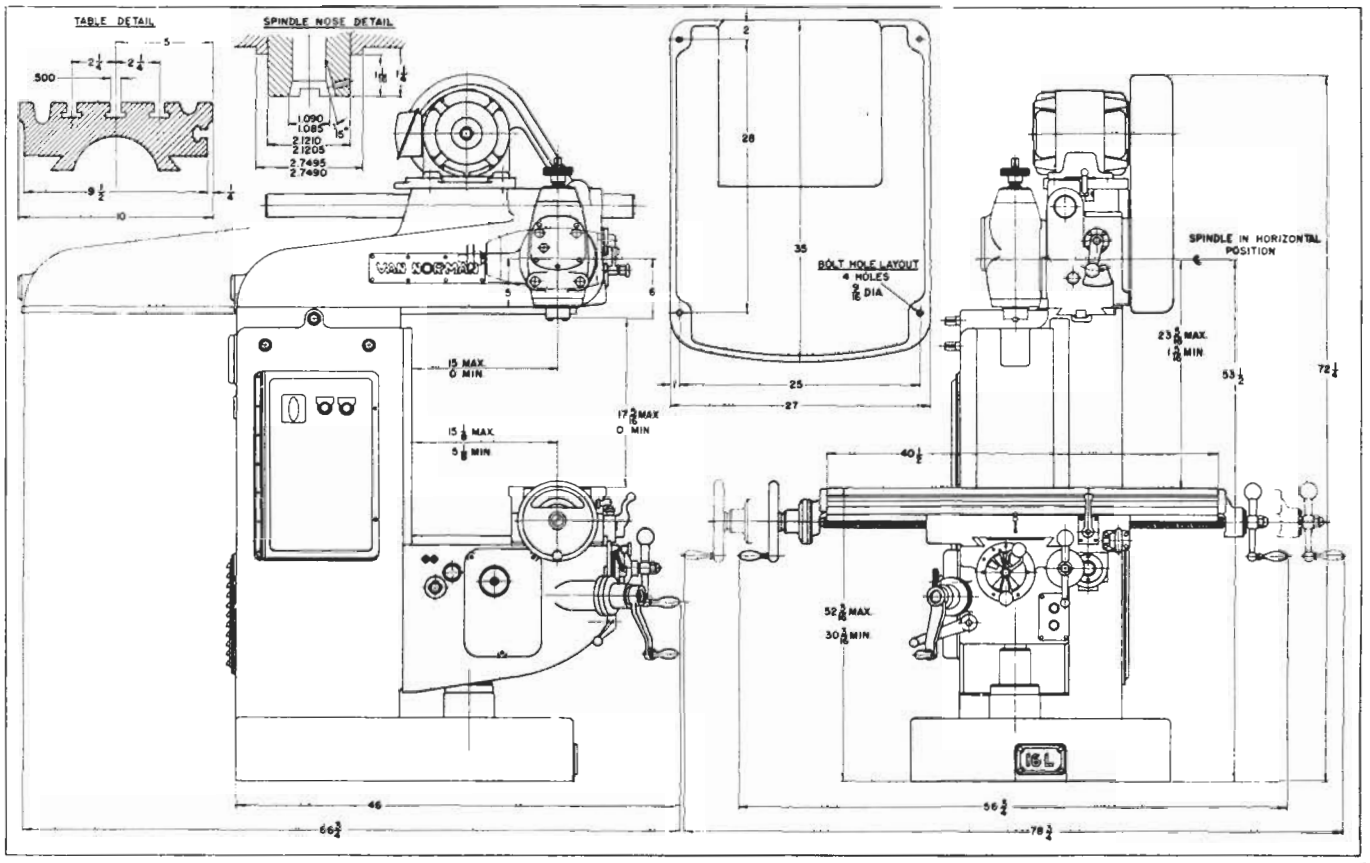

INSTALLATION PLAN—16L

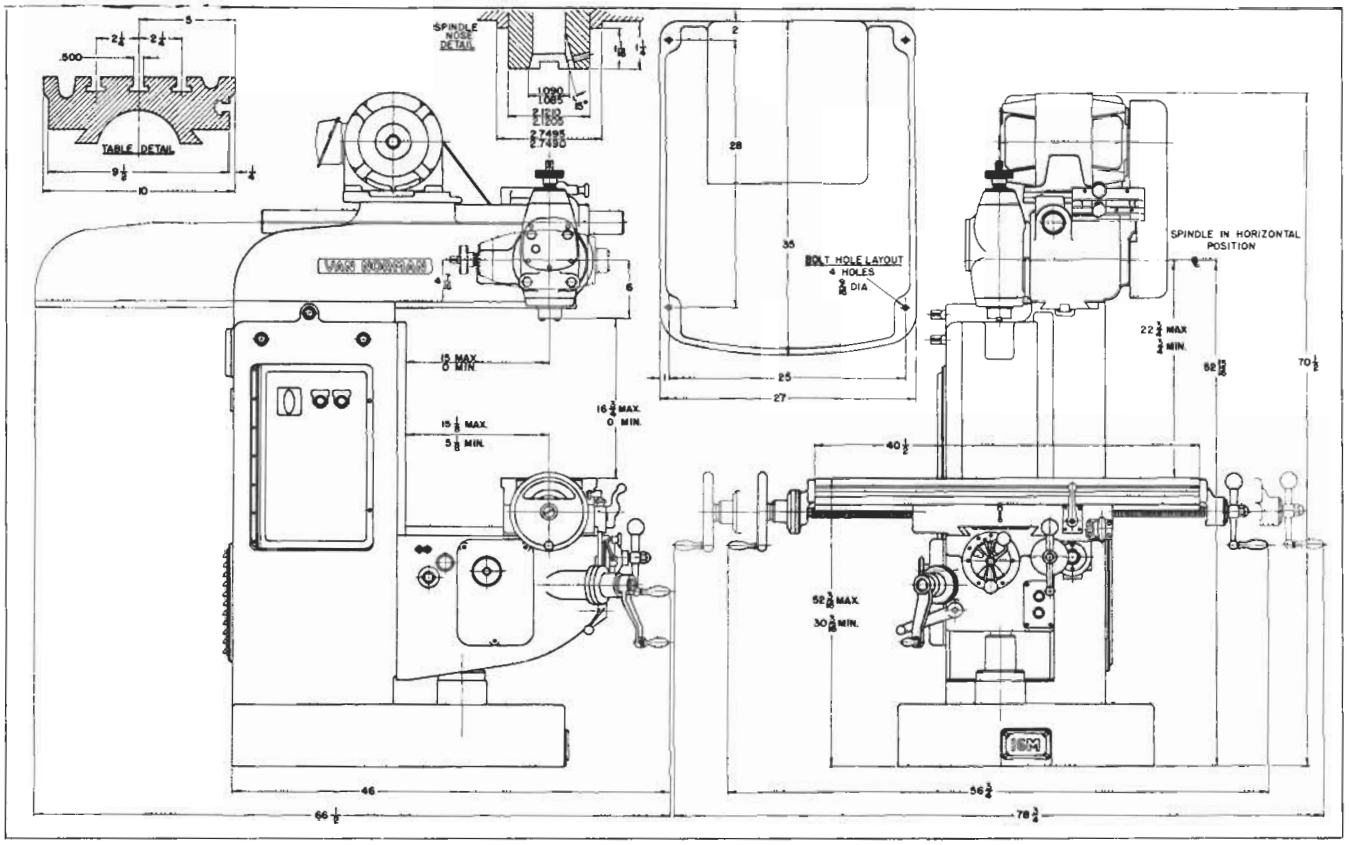

INSTALLATION PLAN—16M

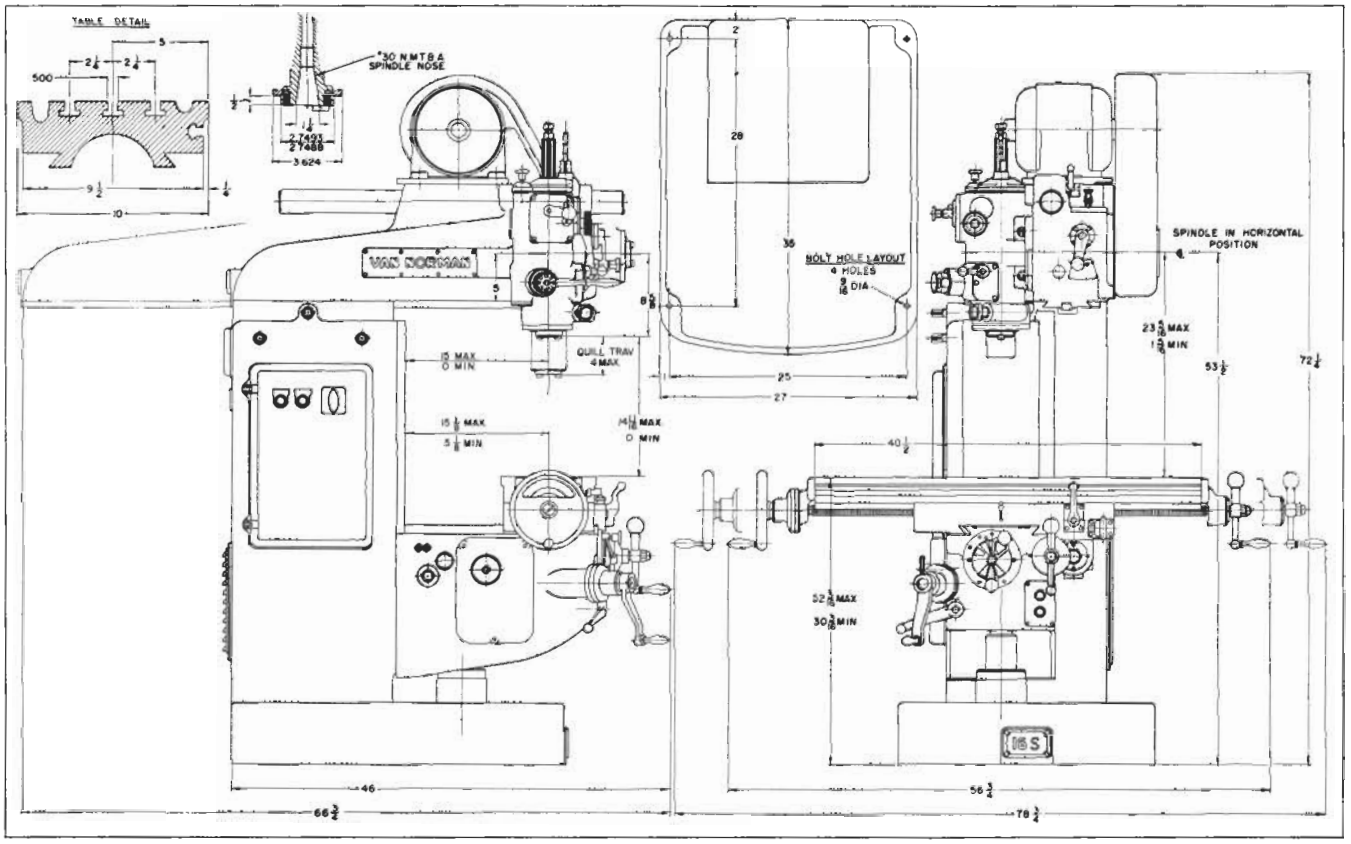

INSTALLATION PLAN—16S

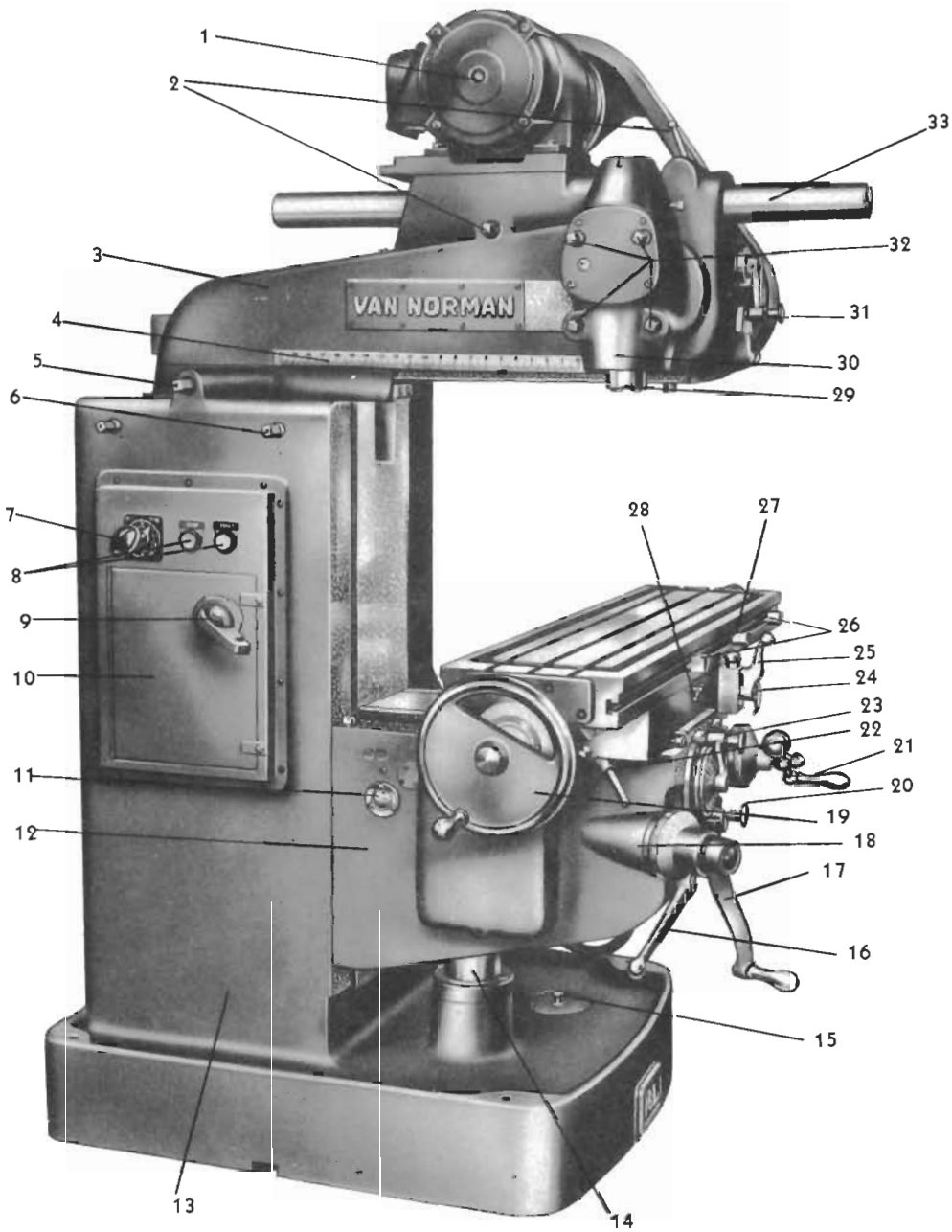

No. 16L

1. 2 H.P. Drive Motor
2. Overarm Clamping Bolt and Binder
3. Adjustable Ram
4. Graduated Ram Scale
5. Ram Traverse Hand Control
6. Ram Clamps
7. Selector Control Switch
8. Start-Stop Switch
9. Disconnect Switch
10. Electrical Control Cabinet
11. Knee Oil Sight Level
12. Knee
13. Column and Base C.I.
14. Elevating Screw
15. Coolant Tank Cleanout
16. Knee Binder
17. Vertical Hand Traverse Control
18. Graduated Dial Vertical Traverse
19. Table Hand Feed Wheel
20. Rotary Feed Selector
21. Hand Crossfeed Crank
22. Saddle Binder
23. Rotary Feed Selector
24. One Shot Lubricator
25. Table Feed Control
26. Table Traverse Limit Stops
27. Adjustable Table Traverse Stop
28. Table Binder
29. Van Norman "C" Style Collet Spindle
30. 90° Swivel Cutterhead
31. Spindle High-Low Range Selector
32. Cutterhead Clamping Bolts
33. Overarm

FIGURE 1

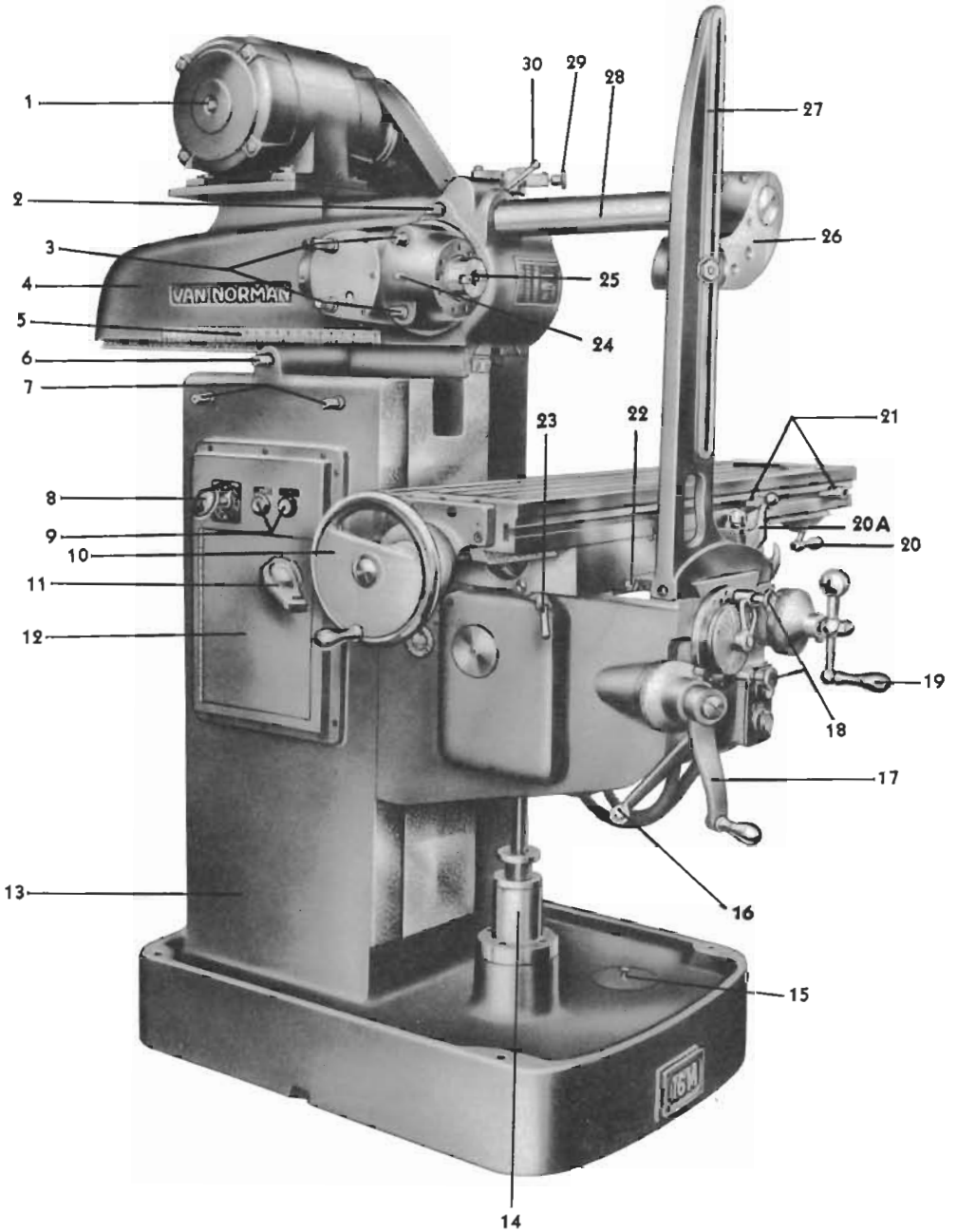

No. 16M

1. 3 H.P. Motor
2. Cutterhead Stop
3. Cutterhead Binder Bolts
4. Ram
5. Ram Scale
6. Ram Rack Pinion
7. Ram Binders
8. Selector Control Lever
9. Start-Stop Rear Control
10. Table Hand Wheel
11. Control Box On-Off Disconnect
12. Electrical Control Box
13. Heavily Ribbed Cast Column
14. Knee Elevating Screw
15. Coolant Tank Cover
16. Knee Binder
17. Knee Elevating Hand Crank
18. Feed Selector Knobs
19. Saddle Cross Feed Hand Crank
20. Table Hand Crank

20A. Directional Table Feed Control

21. Positive and Adjustable Table Stops
22. Saddle Gib Adjusting Screw
23. Saddle Binder Bolt
24. 90° Swiveling Cutterhead
25. V.N. "C" Style or No. 30 N.M.T.B.A. Taper Spindle
26. Arbor Support
27. Arbor Support—Outer Brace
28. Overarm
29. Spindle Speed Change
30. Overarm Binder

FIGURE 2

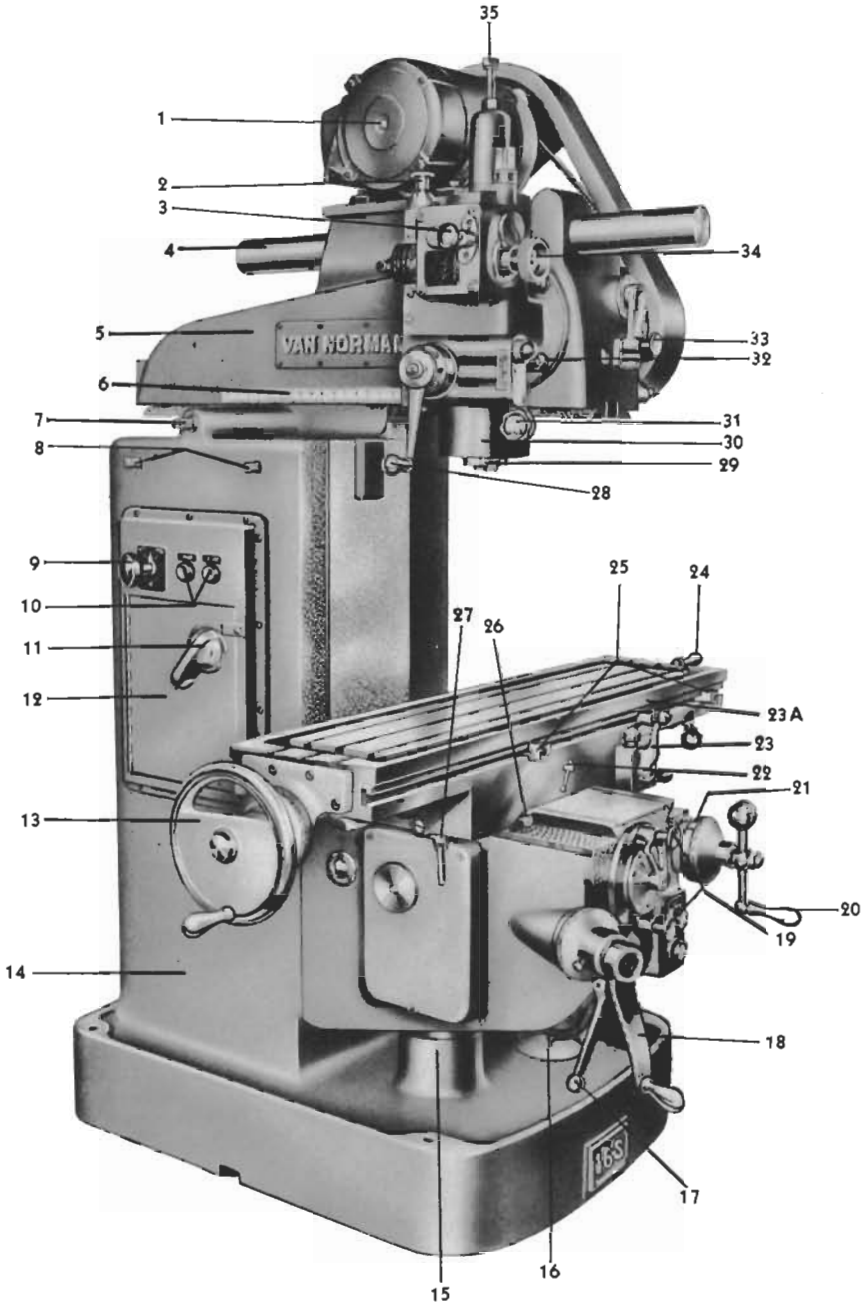

No. 16S

1. 2 H.P. Motor
2. Quill Feed Directional Control Knob
3. Quill Power Feed Shift Lever
4. Overarm
5. Ram
6. Ram Scale
7. Ram Rack Pinion
8. Ram Binders
9. Selector Control Lever
10. Start-Stop Rear Control
11. Control Box On-Off Disconnect
12. Electrical Control Box
13. Table Hand Wheel
14. Heavily Ribbed Cast Column
15. Knee Elevating Screw
16. Coolant Tank Cover
17. Knee Binder
18. Knee Elevating Hand Crank
19. Feed Selector Knobs
20. Saddle Cross Feed Hand Crank
21. Saddle Cross Feed Micrometer Dial
22. Table Binder
23. Directional Table Feed Control

23A. Adjustable Table Stop

24. Table Hand Crank
25. Positive Table Stops
26. Saddle Gib Adjusting Screw
27. Saddle Binder
28. Quill Travel Hand Crank
29. V.N. "C" Style or No. 30 N.M.T.B.A. Taper Spindle
30. 90° Swiveling Cutterhead
31. Quill Binder Knob
32. Cutterhead Binder Bolt
33. High-Low Spindle Speed Control
34. Power Feed Mesh Control
35. Micrometer Quill Travel Control

FIGURE 3

INSTALLATION

HANDLING

Serious damage can result from improperly lifting and moving a milling machine. Where possible, it is the best procedure to "skid" the machine to its location, and ease it into place with jacks. If cranes are used, it is most important that the sling be properly

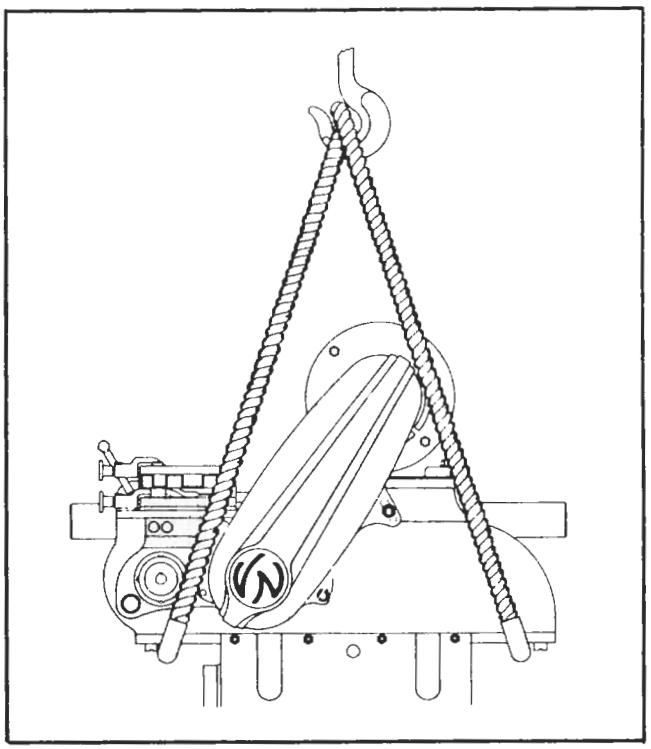

FIG. 4—*Slinging Method*

applied to prevent permanent misalignment in the machine. A sling of ¾" diameter rope about 12′ in circumference or longer, should be placed around the ram, as shown in Figure 4, the hook being located about parallel to the ram shifter shafts, with ram centered on the column. Test the lift for balance before lifting to any height.

CAUTION: *Be sure the ram binders are tightened. It is also recommended that padding be used under the rope to prevent marring the finish on the machine. Avoid other methods of slinging, as they may either spring the machine, or upset it as it is lifted.*

LEVELING

It is essential to the accuracy of the milling machine that it be properly leveled. This should be done by the use of a long spirit level mounted on the table, both longitudinally and transversely. If leveling blocks are used, these should be placed at the four corners of the base, as well as on each side midway between the rear and front edges. If leveling blocks are not used, the concrete floor should be as smooth as possible, and tapered wedges or shingles, should be inserted in any openings so that the base received as much foundation as possible. Lag screws must be used for securing the machine to the floor after leveling.

INITIAL CLEANING AND PREPARATION FOR OPERATION

The machine is shipped with slushing oil on all ways and machined surfaces to prevent rust during shipment. This slushing oil should be washed off with kerosene or other dissolving agent to make sure that all surfaces are free from residue or dust which might have accumulated. Then all slide ways and flat surfaces should be carefully covered with lubricating oil, after which it is advisable to move the table, saddle and knee by hand so that this oil will thoroughly work onto the surfaces. Before operating the machine, check all oil levels, and oil and grease in accordance with instructions under "Lubrication" on page 11.

WIRING AND ELECTRICAL CONTROLS

A feature of your Van Norman Miller is the enclosed electrical controls. A single selector switch, Figure 5, controls the starting and stopping of all motors as well as the reversing of the spindle motor. A push button station is also incorporated in the front of the knee to provide both front and rear control of the machine.

The No. 16 Series Millers have two motors, a reversing motor which drives the cutterhead spindle and a feed drive motor which is mounted on the underside of the knee. If the machine is obtained with a coolant system, the pump with a third motor is mounted on the rear of the base.

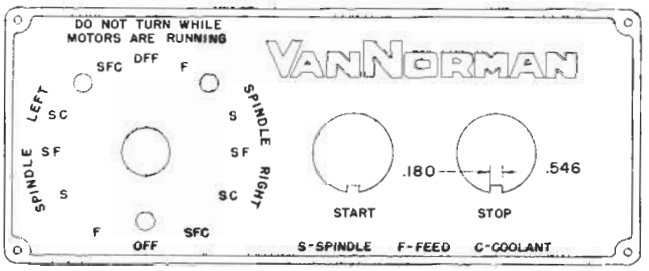

FIG. 5

The selector switch which controls the combination of motors has ten operating positions and two off positions. In the middle position everything is off. In each of the five positions to the right, the spindle is rotating forward, or clockwise when viewed from the rear of the machine. In the position marked "F" the feed motor alone is in operation. In the next position marked "S" the spindle motor alone is in operation. The next position marked "SF" operates the spindle and power feed. In the next position marked "SC", the spindle motor and coolant are in operation. The last position marked "SFC" operates all three motors, namely spindle, feed and coolant. (See Fig. 5.)

In each of the positions to the left of the "OFF" position the spindle motor is reversed for left hand spindle rotation. These positions control the operation of the coolant and feed motors the same as explained above.

Turn the lever, right or left, to position the selector switch at the desired setting. To start the machine in operation once the selector switch is correctly positioned, simply push the black start button. Once the selector switch has been correctly positioned, the machine may also be started or stopped by means of the push button station in the front of the knee.

OPERATION

The machine is now ready for operation so it would be well for the operator to become familiar with the movements and controls, both manual and power operated. As mentioned previously, the machine is operated by two motors, one operating the cutter exclusively, and the other the table feed. Each motor has its attendant gearbox for obtaining various speeds. Vertical adjustment of the knee and cross adjustment of the saddle are entirely manual. Table feed may be either power operated or hand operated.

CAUTION: *STOP MOTORS BEFORE SHIFTING GEARS. Do not clash moving gears when changing speeds or feeds.*

SPINDLE SPEED CHANGES—16M

Eighteen cutter spindle speeds are obtained by positioning the two speed change levers "A" and "B" (Fig. 6) on top of the ram in conjunction with belt changes. There are three positions for each lever as shown by the speed plate between them. In addition the lower lever has a fourth position for a neutral. When in this position, the spindle may be freely rotated by the handwheel "A" (Fig. 6) without turning the other shafts.

Each of the levers has a pull-out knob, and to secure the desired speed it is only necessary to position them as indicated on the speed plate. All sliding gears have been chamfered so that the teeth will slide between each other as desired. Occasionally, however, these teeth may line up in such a way so that their edges come on "dead center", in which case it would be necessary to rotate the hand wheel "A" (Fig. 6) slightly so that the proper meshing of the gears can be obtained. After the proper speed selection has been obtained from these levers, the motor is again started. In event that the spindle is to rotate in the opposite direction, this is accomplished electrically by the selector switch (Fig. 5) as explained in the section entitled Wiring and Electrical Controls, page 7.

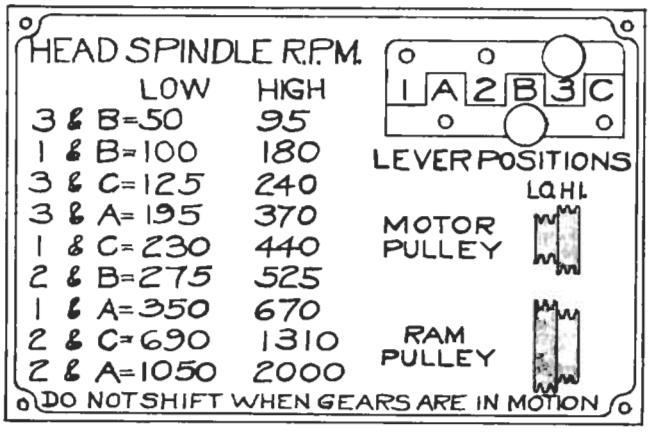

FIG. 6

SPINDLE SPEED CHANGES—16L-16S

Eight cutter spindle speeds are obtained by a combination of positioning the high-low ranges with a change of pulley steps. The spindle high-low selector (Item 31, Fig. 1) is identical on both the 16L and 16S Models. When facing the machine and moving the range selector to the left, the low range is engaged. Positioned at center in a vertical plane, the speeds are disengaged and the cutterhead is in neutral. The 16L Model has speeds from 84 to 2760 R.P.M. The 16S Model speeds are from 110 to 3600 R.P.M. Check spindle speed plate for desired R.P.M. and position lever and belt accordingly. Changing of belt for desired speeds is illustrated in Figures 7 and 8. The motor plate operates on a rack and pinion for tightening and loosening belt tension. Figure 7 shows belt tension in drive position. To change speeds, pull knob "A", Figure 7, and swing handle "B" to right. This action moves entire motor mount toward the front of the machine decreasing all belt tension as shown in Figure 8. Change to desired pulley steps. Reverse the process to tighten belt moving lever "B", Figure 8, to left. Knob "A" will fall into detent "C" locking the motor mount, rack and pinion in drive position.

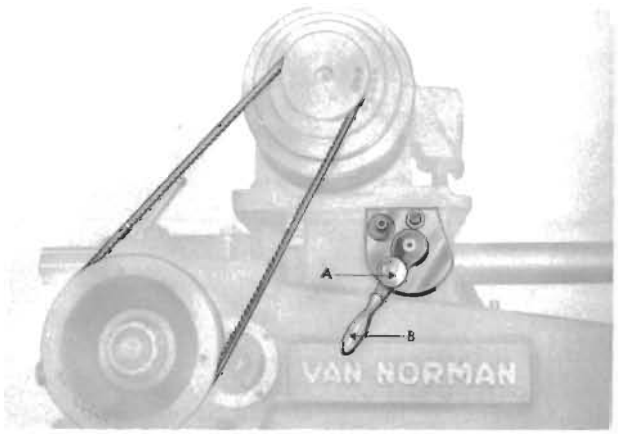

FIG. 7

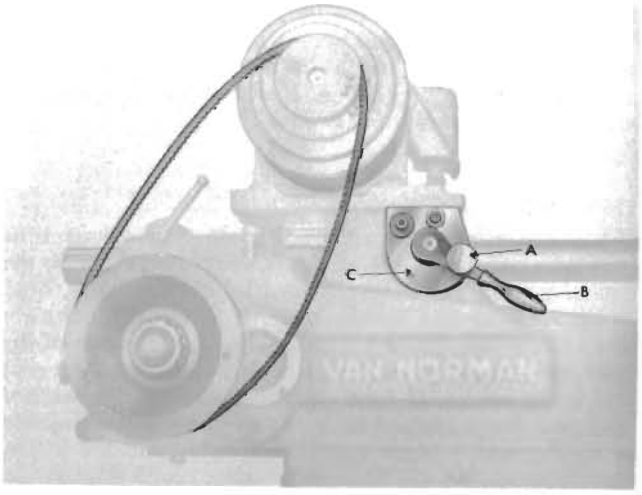

FIG. 8

POWER FEED—TABLE

To obtain the table power feed, first be sure the feed motor is in operation then engage the power feed lever (Item 25, Fig. 1) on front of the saddle. The feed lever is directional, that is, the table will travel in the direction that the lever is positioned.

The power feed may be automatically disengaged as desired by positioning the adjustable table stop, (Item 27, Fig. 1). This will assure the table stopping at a given position repeatedly.

POWER SAFETY STOPS

Table travel limit stops (Item 26, Fig. 1) are fixed in position at the factory at each end of the travel run. These stops are provided to prevent the feed screw running to the end of the thread and damaging the feed mechanism. Under no conditions should these stops ever be moved.

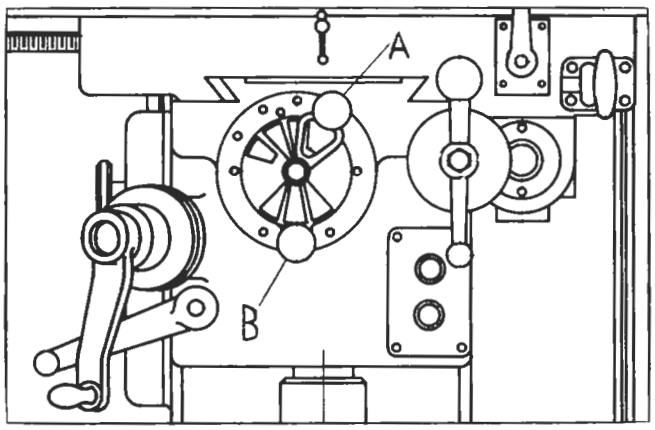

FIG. 9

POWER FEED CHANGES

The No. 16 Series Van Norman Ram Type Milling Machines have nine feed rates from 0.6 inches per minute to 16 inches per minute. The feed changes are made by the two feed change levers A and B (Fig. 9) in the front of the knee. They operate very similar to the speed change levers in that the top lever "A" is positioned over the station with the desired feed rate and the lower lever "B" is positioned below the station with the same feed rate, *i.e.* if the desired feed rate is 7 inches per minute place the top lever in the second position from the right over the station with the Figure 7 and place the lower lever in the position furthese to the right as this station also contains the desired feed rate of 7 inches per minute.

The handwheel on the left side of the knee may be turned if necessary to mesh the gears.

HAND FEEDS

The table can be moved longitudinally by hand by either the hand wheel (Item 19, Fig. 1) at the left end of the table or the crank (Item 20, Fig. 2) at the right hand end of the table.

The cross feed adjustment is by means of the cross feed hand crank (Item 21, Fig. 1) in front of the machine.

The vertical adjustment is by means of the vertical feed hand wheel (Item 17, Fig. 1) also conveniently located at the front of the machine.

Large diameter dials graduated in thousandths are provided for all hand movement adjustments. These dials can be set by thumb screws provided on each dial.

Binders are also provided for each of the three movements. The table binder (Item 28, Fig. 2) is located in front of the saddle. The cross feed or saddle binder (Item 22, Fig. 1) is located on the left side and operates by tightening the saddle gib. The vertical feed or knee binder (Item 16, Fig. 1) is located in the front of the knee and operates by tightening the knee gib against the angle on the face of the column.

Whenever a member is to be moved, either by hand or power feed, the appropriate binder must be loosened. At all other times the binders should be tight. This is important as they help to provide rigidity to the machine.

RAM

The ram is solidly locked to the column by means of two binders (Item 7, Fig. 2). To move the ram in or out on the column, it is very essential to loosen these binders. The ram movement is made by rotation of the ram adjustment (Item 6, Fig. 1) which turns a pinion which in turn engages a rack on the bottom of the ram. A hand crank is furnished with the machine which fits the binders and ram adjustment.

IMPORTANT: *After making the necessary ram adjustment the binders must be tightened before any milling is done on the machine.*

OVERARM

When heavy horizontal milling is to be done, it is desirable to steady the arbor with the overarm and arbor support. The bar type overarm is locked in position by the binders (Items 2, Fig. 1).

CUTTERHEAD—16L-16M

The cutterhead is adjustable to any angle between horizontal and vertical, the desired angle being indicated by the graduations on the flange. To move the head, loosen the four binders (Items 32, Fig. 1). Slowly swing the head to the desired angle, and tighten the four binders. Two stops (Item 2, Fig. 2) and in back of Item 24, Fig. 2, on the ram have been factory set to accurately determine the horizontal and vertical positions. When moving the head, do not bang it against these stops as misalignment might result from the stresses incurred.

CUTTERHEAD—16S

The 16S quill travel cutterhead is adjustable to any position between a horizontal and a vertical plane, the desired angle being indicated by graduations on the flange of the head. To move the head loosen four binder bolts located around flange of head as shown in Item 32, Figure 3. Swing the head slowly to the desired position and lock all four binder bolts. To operate the machine using the quill feed, loosen quill binder, Item 31, Figure 3. Select feed desired by moving quill power feed shift lever, Item 3, Figure 3, to proper location. There are three feeds—.0015″-.003″ and .006″. There is also a neutral position. See plate mounted on quillhead as illustrated here in Figure 10. Knob 2, Figure 3, controls in and out direction of the quill. Power feed can be engaged or disengaged by pushing lever as indicated under Fig. 11. Quill can be fed a maximum of 4″. At the top of the cutterhead, when in a vertical plane, is a micrometer adjustment which can be set for any length of quill travel desired within the range of traverse. Turn the knurled dial to desired stroke. A recessed rod scaled in inches operates in conjunction with the knurled

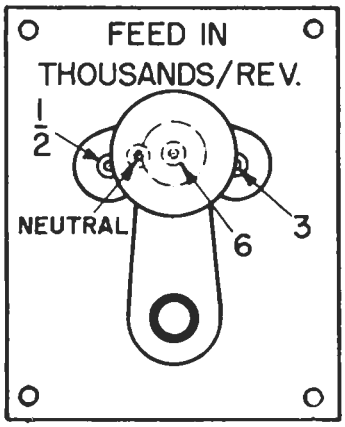

FIG. 10

FIG. 11

knob for the desired stroke. Dial is graduated in tens of thousandths. One complete revolution equals .125″. This knurled knob when set for desired stroke also determines limit of automatic power feed and at the point where the power kick-out takes effect. To operate the machine for normal milling operations, retract the quill travel up into the head and lock quill binder, Item 31, Figure 3. Remove quill hand traverse handle, Item 28, Figure 3, as this hand lever is not needed on this type of operation. Place quill power feed shift lever, Item 3, Figure 3, in neutral position, select speeds and feeds desired and proceed as in conventional milling as otherwise described in this booklet. There is a safety clutch in the cutterhead to control any possible overload.

UNIVERSAL SADDLE

To adjust the table on models equipped with universal saddle to desired angular position, loosen hollow-hex head screws on underside of lower saddle unit, one at left front, one at right rear, until they drop entirely clear of the upper swivel unit. Then loosen the three swivel saddle binders, one on front face, one on left side, and other on rear face of lower saddle unit. The table then can be revolved to the desired angular position and the table locked by means of the swivel binders.

When the table is used in normal operating position (0 degree angularity) the table should be revolved to the normal position after which the hollow-hex head locking bolts on underside of saddle are engaged in the threads of the upper saddle unit and securely fastened. It is also advisable to secure the swivel saddle binders. For extreme accuracy in setting the table to "O" position, use an indicator.

PERIODIC MACHINE ADJUSTMENTS

SPINDLE BEARINGS

CAUTION: *Do not attempt to take up spindle bearings without a thorough knowledge of bearing adjustments and operating conditions.*

The spindle bearings used in the head are the taper roller type and have been properly adjusted for average conditions before leaving the factory, so should not require readjustment before use.

If desired, the end play in the spindle bearings may be checked after a few months of operation in the following manner: Using a lead or composition hammer, gently tap the face of the spindle until all play is taken up towards the rear of the machine. Place an indicator against the face, and then tap the spindle shaft forward from the rear. If the play exceeds .001″, adjustment may be made as follows:

ADJUSTMENT—16L-16M

1. Remove the rear cap from the cutterhead.
2. Loosen set screw in bearing nut.
3. Loosen or tighten the nut as necessary to secure the desired adjustment.
4. Tighten set screw and reassemble the rear cap on the cutterhead.

ADJUSTMENT—16S

1. Remove the ½″ pipe plug which is located in front of the circular scale on the cutterhead.
2. Move quill until the rear most plug in the quill is accessible—remove plug.
3. Revolve the spindle so that a wrench can be inserted in the set screw in the bearing adjusting nut.
4. Loosen set screw and loosen or tighten the nut till the desired bearing adjustment is achieved.
5. Tighten set screw, replace plug in quill and pipe plug in cutterhead.

GIBS

CHECKING GIB ADJUSTMENTS: Gib adjustments should only be made by those who are acquainted with the operation. In general, all gibs should be tight enough to eliminate all play, but not so tight that there will be a heavy drag on the working parts. Gibs that are too loose will result in inaccurate work. Gibs that are too tight will cause severe wear and strain on the operating mechanisms.

The gibs are properly adjusted at the factory and when readjustment becomes necessary, proceed as

follows: The table gib is adjusted by means of two shouldered screws located on each end of the saddle. By first loosening one and then tightening the other, the taper gib may be adjusted as needed. The saddle and knee gibs are adjusted in a like manner.

RAM GIB

The ram gib is adjusted by two adjusting screws. The front screw and the end screw are the adjusting screws. To adjust the gib the ram stops must be removed. The stops are located on the bottom of the ram.

Loosen the set screws which are located on the front and back end of the column. Turn both screws on the gib a like amount. Retighten the set screws in the column to hold the adjustment. Replace ram stops.

TABLE FEED SCREW

The backlash in the table feed screw is adjusted by an adjustable bronze feed screw nut located at the left hand end of the saddle. This nut is located in the saddle mechanism just above the saddle binder. To make any desired adjustment loosen the check nut and insert a pin in any of the many holes around the flange of the nut and turn it in either direction until the backlash is from .002″ to .005″. After completing the adjustment tighten the check nut.

SADDLE FEED SCREW

The saddle feed screw is adjusted by means of an adjustable nut in the front end of the bracket carrying the screw under the saddle. An Allen set screw in the bottom of this bracket locks this nut in place. To adjust, loosen the set screw, insert a pin in one of the many holes around the flange of the adjustable nut and turn it until the backlash is from .002″ to .005″. After making the desired adjustment the set screw should be tightened.

LUBRICATION

Lubrication of this machine has been very thoroughly developed so that a minimum of attention is required. However, it is absolutely essential that inspection be made at necessary intervals.

In all units where oil is specified unless otherwise indicated, we recommend a good grade oil with a viscosity of approximately 300 S.U.V. (Seybolt Universal Viscosity) at 100° Fahrenheit.

It is recommended that the oil be drained from the ram, knee and cutterhead every four months. The reservoir should then be cleaned with a light flushing oil. The machine may be run up to five minutes with this flushing oil, after which it should be drained and the reservoir refilled to the proper level with the recommended lubricant.

CUTTERHEAD—16L-16M

An oil sight glass is provided on the side of the cutterhead for inspection of the oil level. The oil level should be at the center of the glass when the head is in the horizontal position and the spindle is stationary. This reservoir lubricates the spiral bevel gear. When necessary the oil may be replenished by removing the oil plug on the top. A drain plug is located on the underside of the cutterhead. The capacity is 1 pint.

Spindle bearings should be lubricated every six months with anti-friction bearing grease, supplied by Van Norman in one pound cans under Part No. 19249.

CUTTERHEAD—16S

The spiral bevel gears are lubricated by oil from the ram.

The cutterhead bearings should be lubricated once a year, through a Zerk fitting.

To lubricate: (1) Remove ½″ pipe plug located in front of circular scale on the cutterhead. (2) Move quill until "the first plug" nearest the front of quill is accessible, (the second plug is for bearing adjustment described on previous page). (3) Remove plug, and screw in Zerk fitting—apply grease, approximately four to six shots. Both front and rear bearings are lubricated simultaneously in this operation. (4) Remove Zerk fitting, and replace plugs.

Grease quill feed worm through grease fitting located on side of cutterhead—apply one shot of a stringy-fibrous grease every four weeks.

Feed gears should be repacked once a year with a stringy-fibrous grease. To accomplish this repacking, remove top and round side covers, indicated as "G" on 16S lubrication chart.

TABLE AND SADDLE

The table and saddle mechanism, as well as saddle and table ways, are lubricated by means of a single shot oiling device located at the front of the saddle. By pulling and releasing the plunger the necessary oil is distributed to these surfaces. This plunger should be operated every hour or two depending upon the use of the machine. The oil reservoir holds sufficient oil for several weeks' operation. An oil sight located in the side of the reservoir indicates the oil level and oil should be added as required.

RAM—16M

An oil sight glass is provided on the right front side of the ram for inspection of the oil level. When the ram gears are stationary, the oil level should be at the center of the sight glass. When necessary, the oil may be replenished by removing the small cover in the top of the ram immediately behind the speed change levers. Oil can be drained by removing plug located on the underside of ram near front. The capacity of the ram is 6 quarts.

RAM—16L-16S

An oil sight glass is provided at the front face of the ram for inspection of the oil level. When the gears are stationary the oil level should be at the center of the sight glass. Oil may be replenished by removing the pipe plug located in the ram cover.

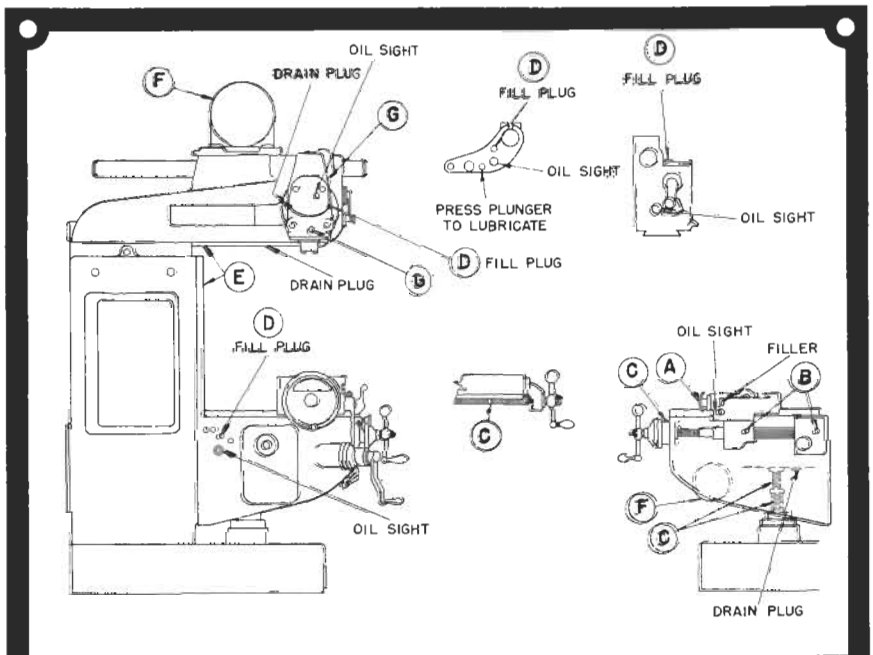

LUBRICATION POINTS	FREQUENCY	TYPE OF LUBRICANT
A	PULL PLUNGER EVERY 2 HOURS	S.A.E. 30 OIL
B	GREASE EVERY 4 WEEKS	BEARING GREASE
C	EVERY WEEK - WITH SQUIRT CAN	S.A.E. 30 OIL
D	KEEP OIL LEVEL - CHANGE EVERY 4 MOS.	S.A.E. 30 OIL
E	DAILY - WITH SQUIRT CAN	S.A.E. 30 OIL
F	AS SPECIFIED BY MOTOR MANUFACTURE	
G	TWICE A YEAR	BALL BEARING GREASE

LUBRICATION CHART—16L

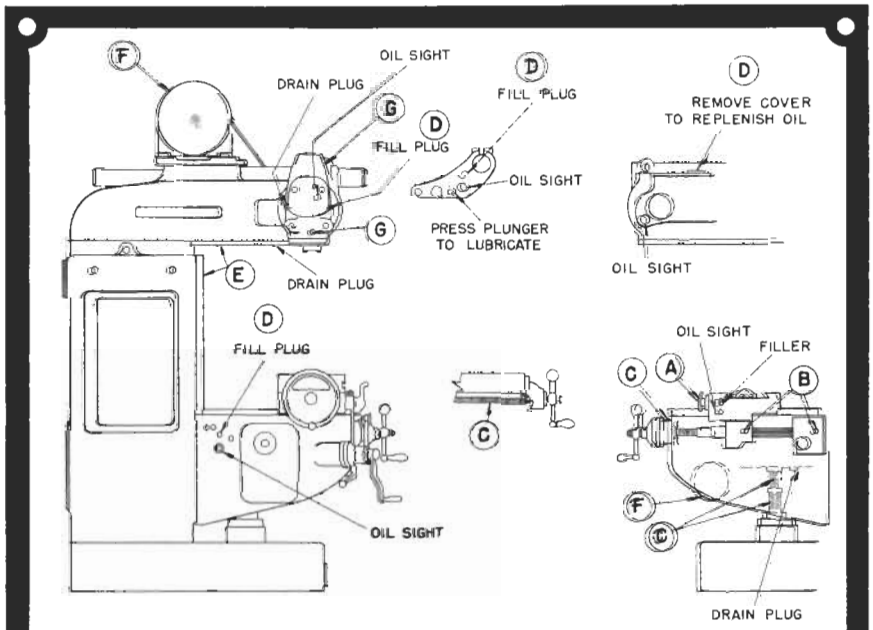

LUBRICATION POINTS	FREQUENCY	TYPE OF LUBRICANT
A	PULL PLUNGER EVERY 2 HOURS	S.A.E. 30 OIL
B	GREASE EVERY 4 WEEKS	BEARING GREASE
C	EVERY WEEK - WITH SQUIRT CAN	S.A.E. 30 OIL
D	KEEP OIL LEVEL - CHANGE EVERY 4 MOS.	S.A.E. 30 OIL
E	DAILY - WITH SQUIRT CAN	S.A.E. 30 OIL
F	AS SPECIFIED BY MOTOR MANUFACTURE	
G	TWICE A YEAR	BALL BEARING GREASE

LUBRICATION CHART—16M

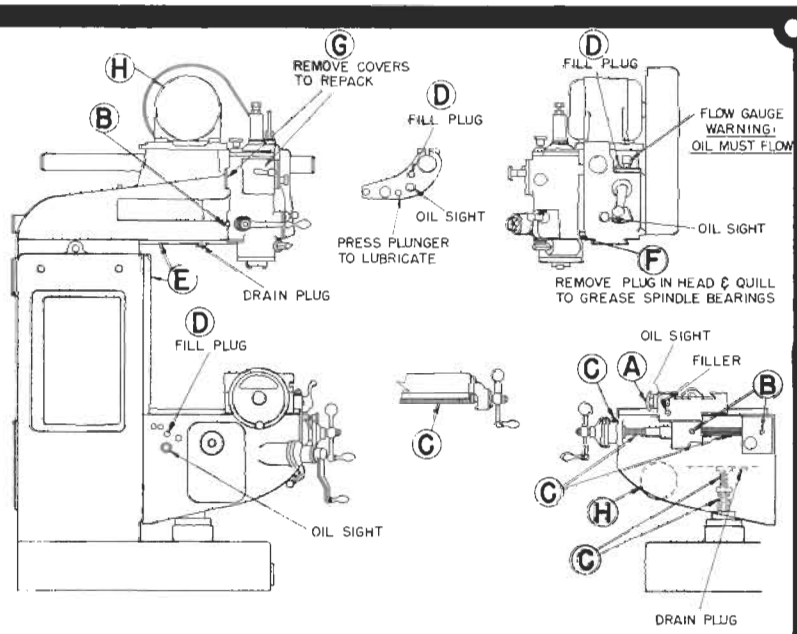

LUBRICATION POINTS	FREQUENCY	TYPE OF LUBRICANT
A	PULL PLUNGER EVERY 2 HOURS	S.A.E. 30 OIL
B	GREASE EVERY 4 WEEKS	BEARING GREASE
C	EVERY WEEK - WITH SQUIRT CAN	S.A.E. 30 OIL
D	KEEP OIL LEVEL - CHANGE EVERY 4 MOS.	S.A.E. 30 OIL
E	DAILY - WITH SQUIRT CAN	S.A.E. 30 OIL
F	ONCE A YEAR	BALL BEARING GREASE
G	ONCE A YEAR	STRINGY ADHESIVE TYPE GREASE
H	AS SPECIFIED BY MOTOR MANUFACTURER	

LUBRICATION CHART—16S

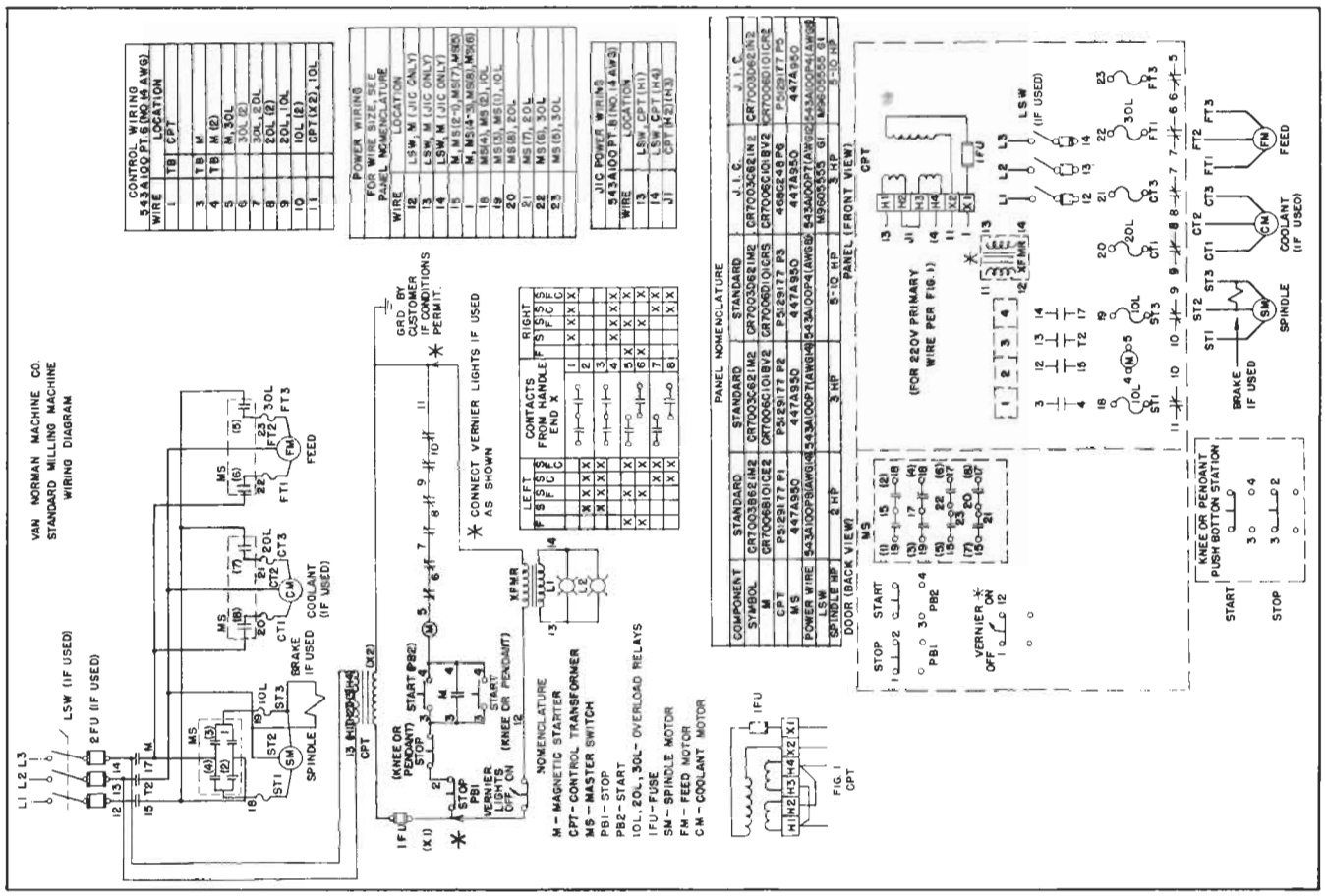

WIRING DIAGRAM—ALL MODELS

Instructions for Ordering Replacement Parts for

VAN NORMAN RAM TYPE MILLING MACHINES

Plain and Universal Models

The following pages contain full information to enable users of Van Norman Nos. 16L, 16M and 16S Ram Type Milling Machines to order replacement parts with the minimum of effort.

We have endeavored to simplify the identification and selection of such parts through the use of sketches of parts for each major unit of the machine. In addition to the sketches, each part is identified by its part number.

It is important that in any correspondence with the factory regarding parts, the model and serial numbers of machines should be given. The serial number is stamped on the front face of the column near the top on all Van Norman Milling Machine Models, also all machines manufactured after March 1947 carry a plate on the side of the machine giving the model and serial number.

At the time of printing the following Parts Lists were accurate. The machines are continuously being improved and if your machine varies in any respect from this it is only because it has been improved to give you better performance.

The design and specifications of these machines are subject to change without notice.

INDEX

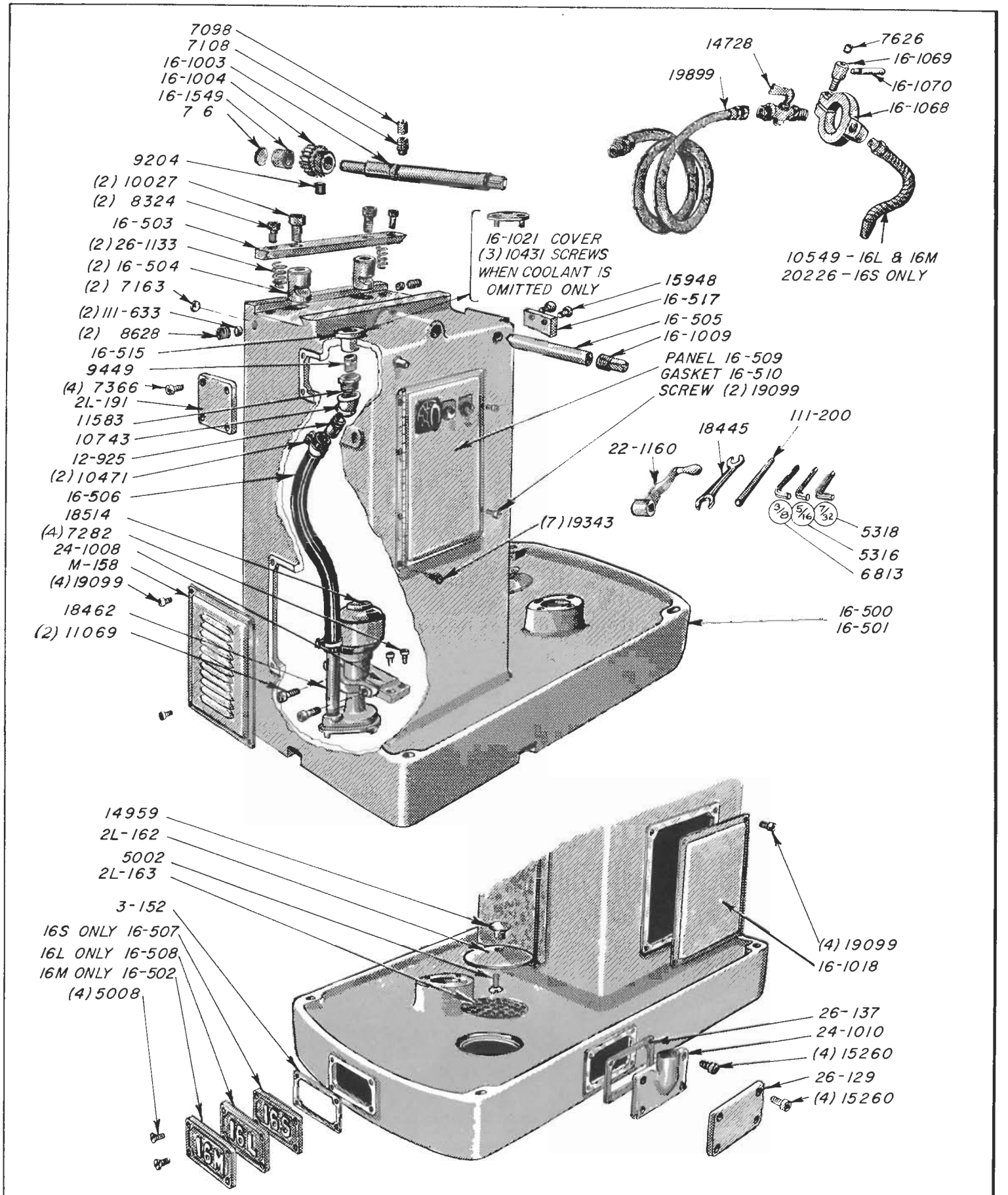

COLUMN DETAILS

PLATE 1

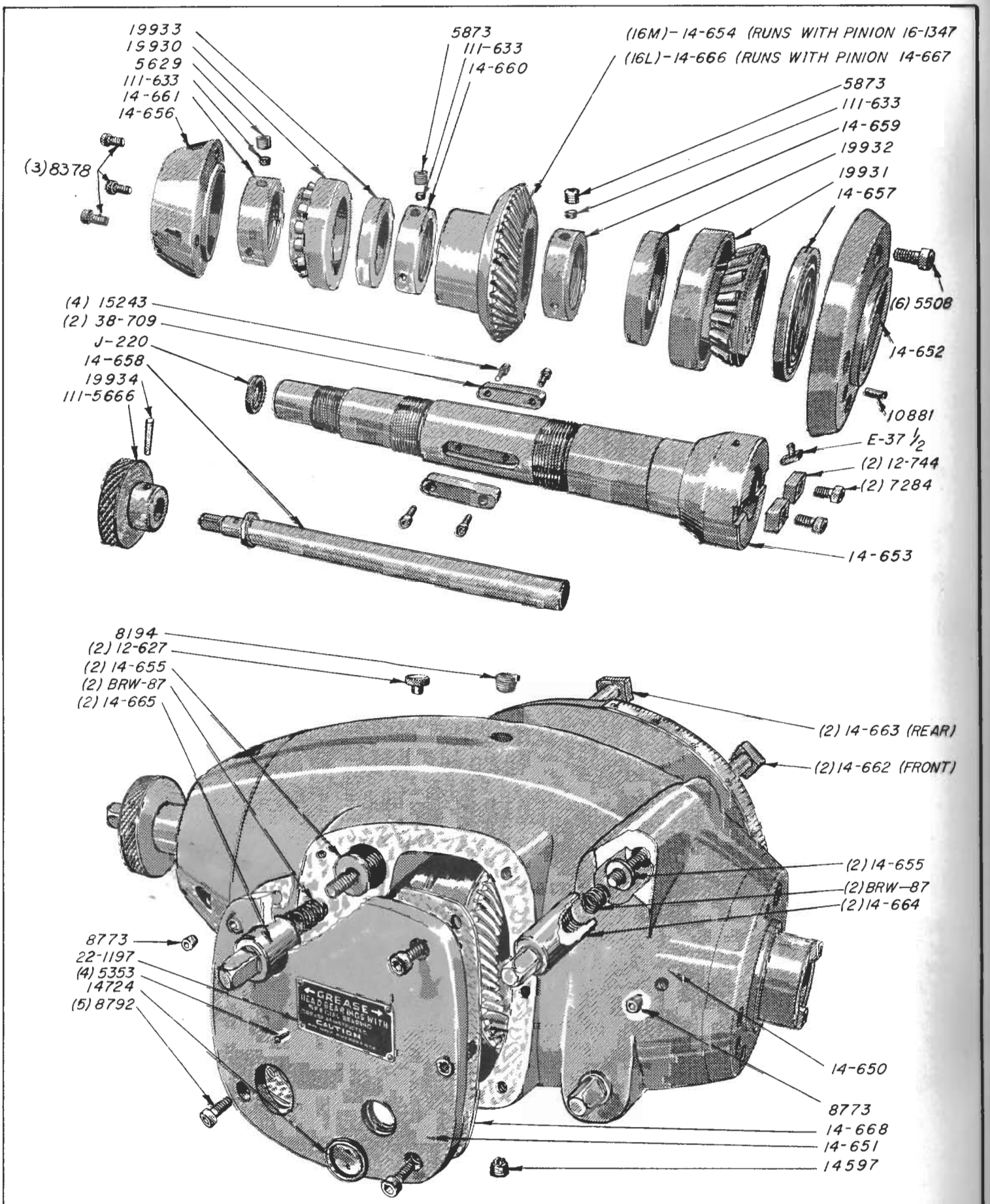

16L & 16M CUTTERHEAD

PLATE 2

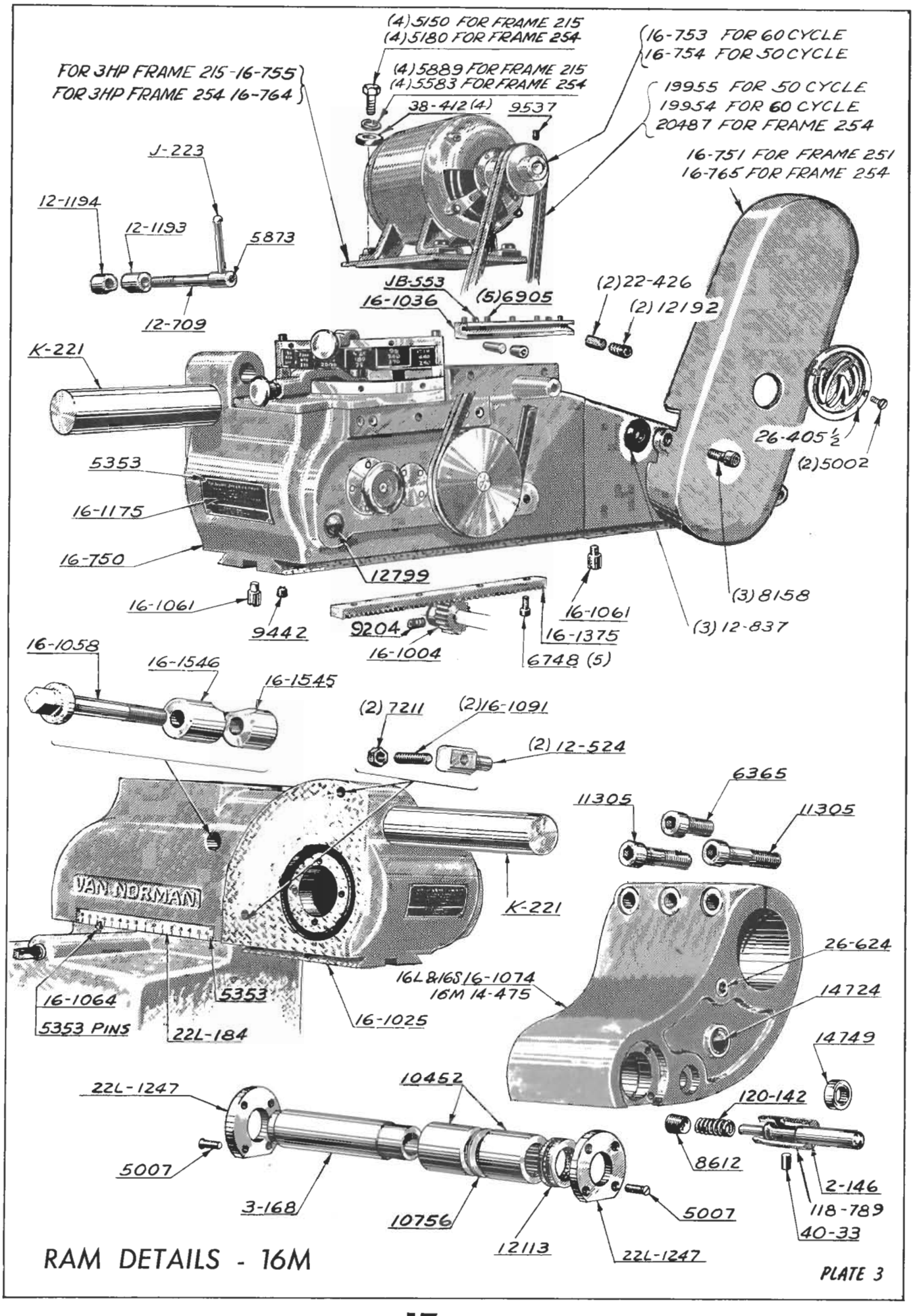

RAM DETAILS - 16M

PLATE 3

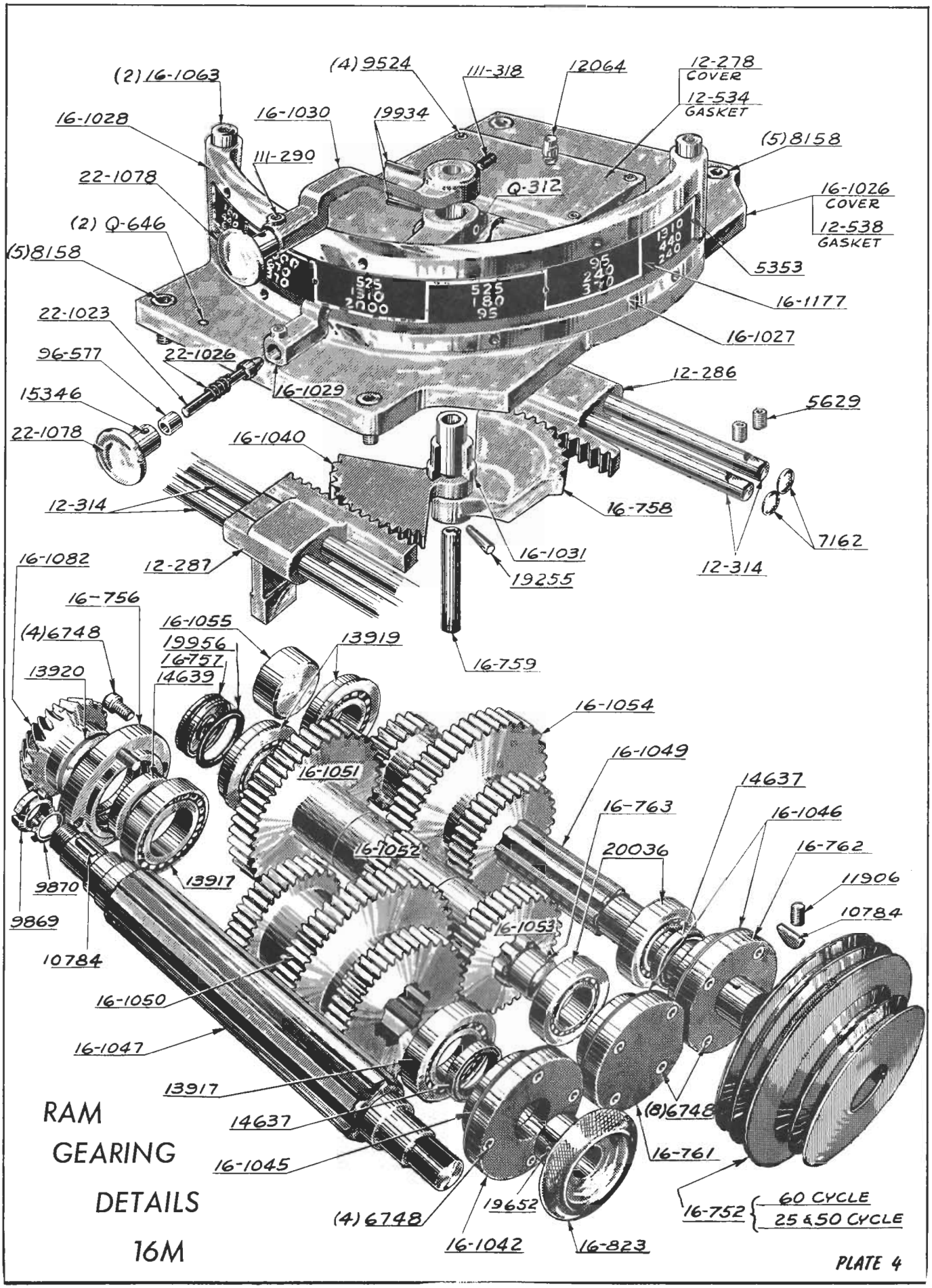
(2) 16-1063
(4) 9524
111-318
12064
12-278
COVER
12-534
GASKET
16-1028
16-1030
19934
(5) 8158
111-290
22-1078
Q-312
16-1026
COVER
12-538
GASKET
(2) Q-646
(5) 8158
5353
16-1177
22-1023
16-1027
96-577
22-1026
16-1029
12-286
15346
5629
22-1078
16-1040
12-314
16-758
7162
16-1031
12-287
12-314
16-1082
19255
16-756
16-1055
(4) 6748
19956
13919
16-757
13920
14639
16-759
16-1054
16-1049
16-1051
14637
16-763
16-1046
16-1052
20036
16-762
13917
11906
9870
10784
9869
16-1053
10784
16-1050
16-1047
13917
(8) 6748
14637
16-761
16-1045
16-752
60 CYCLE
25 & 50 CYCLE
19652
(4) 6748
16-1042
16-823
RAM
GEARING
DETAILS
16M
PLATE 4

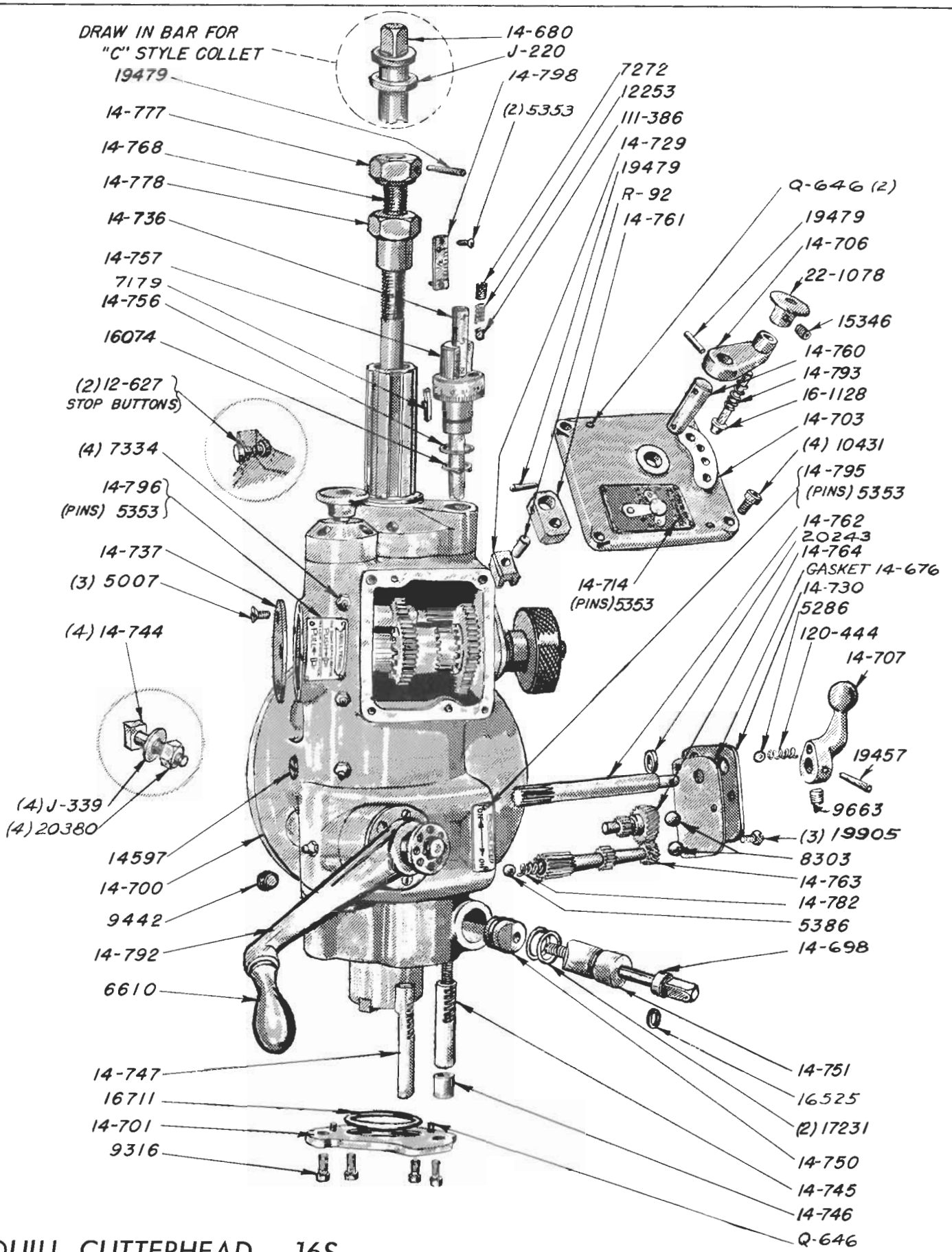

QUILL CUTTERHEAD - 16S

PLATE 5

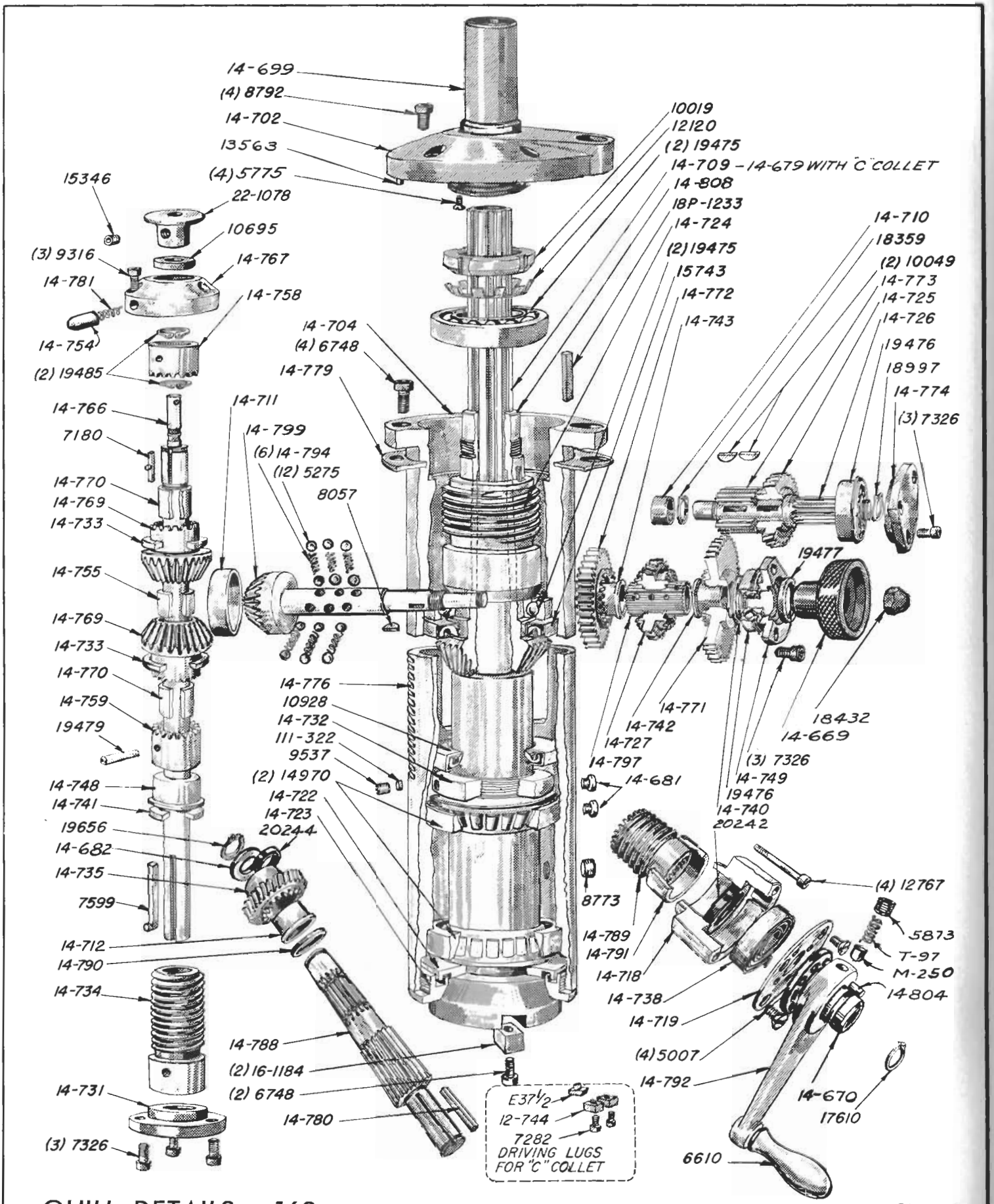

QUILL DETAILS - 16S

PLATE 6

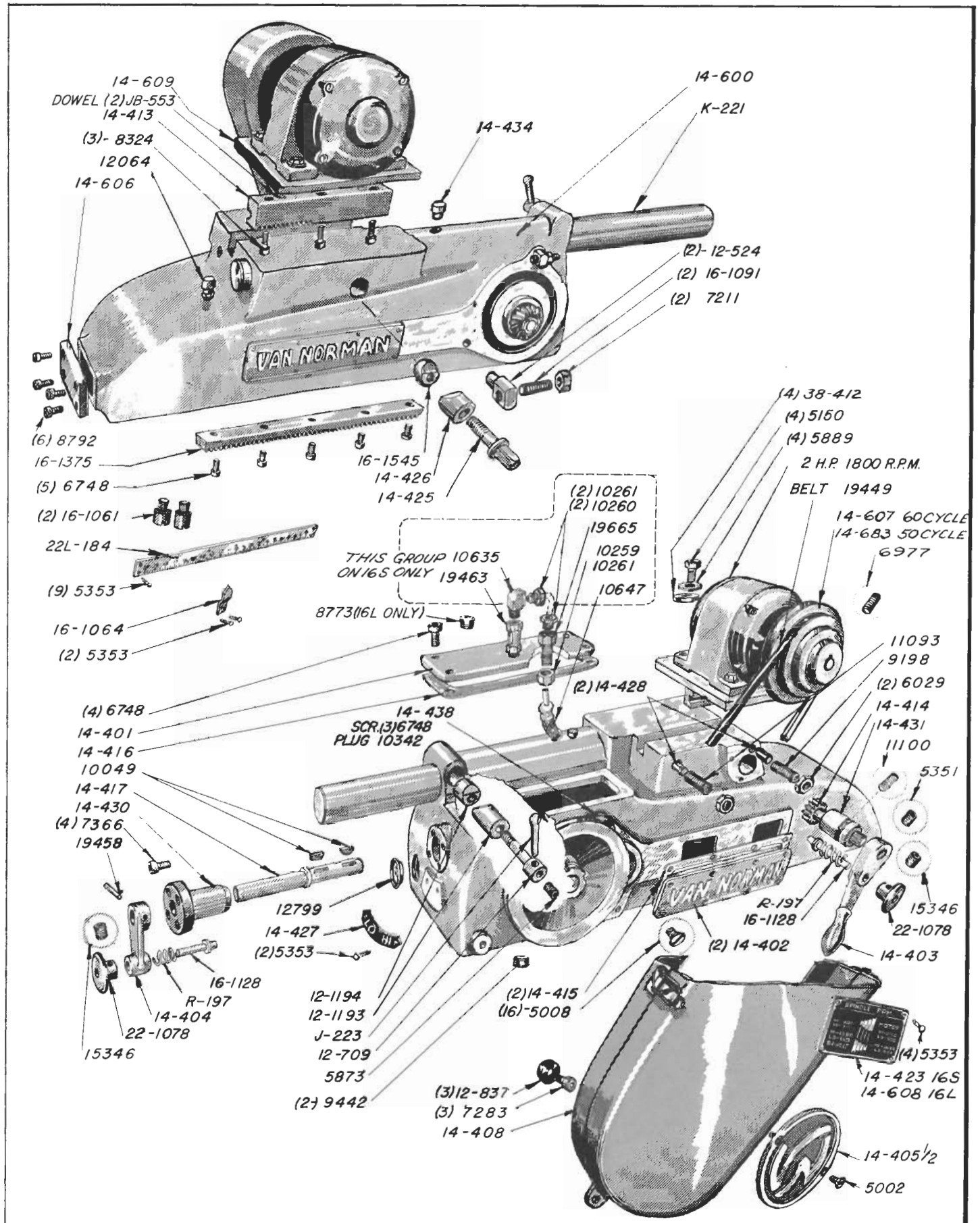

RAM DETAILS 16L - 16S

PLATE 7

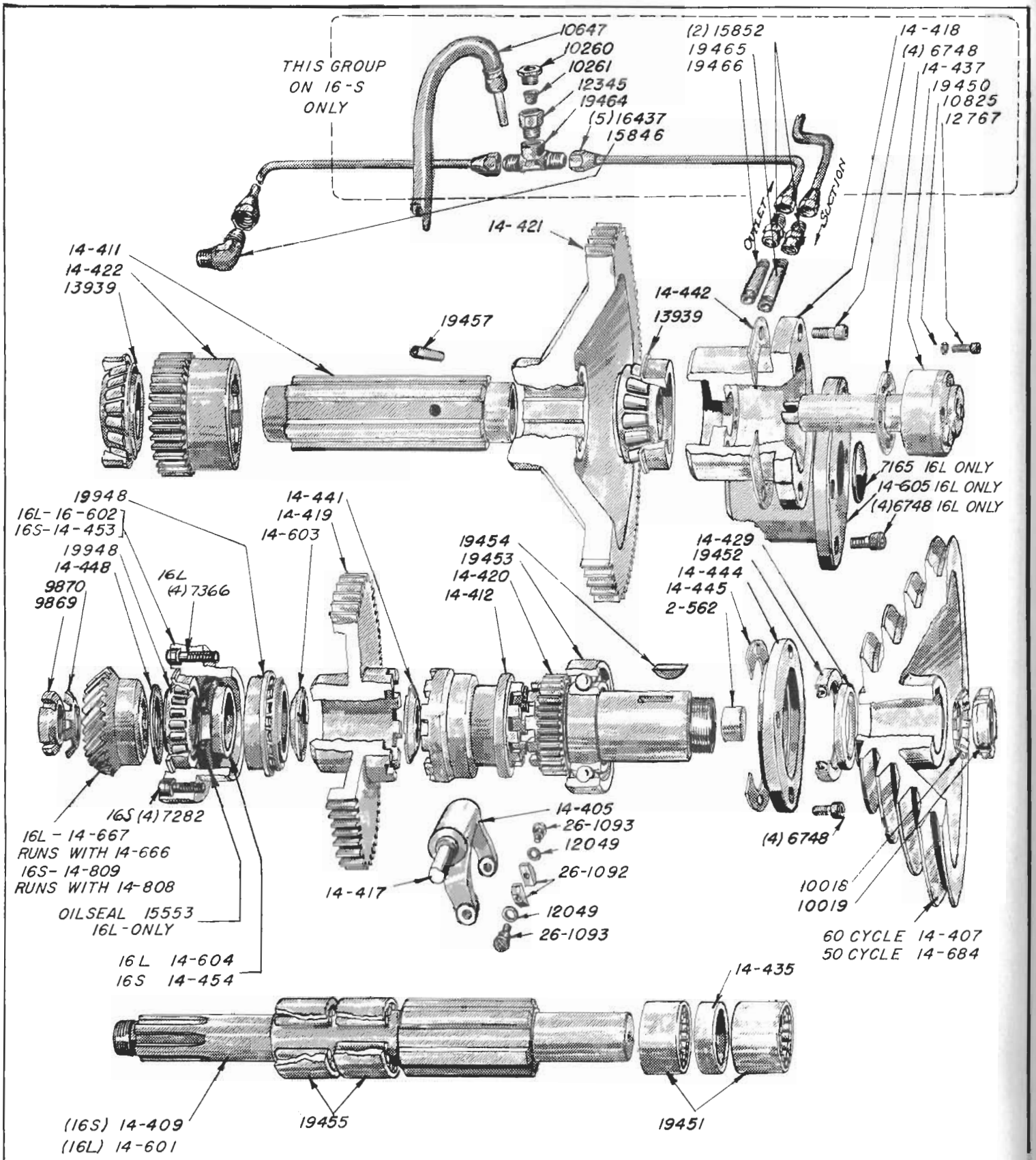

RAM GEARING DETAILS 16L - 16S

PLATE 8

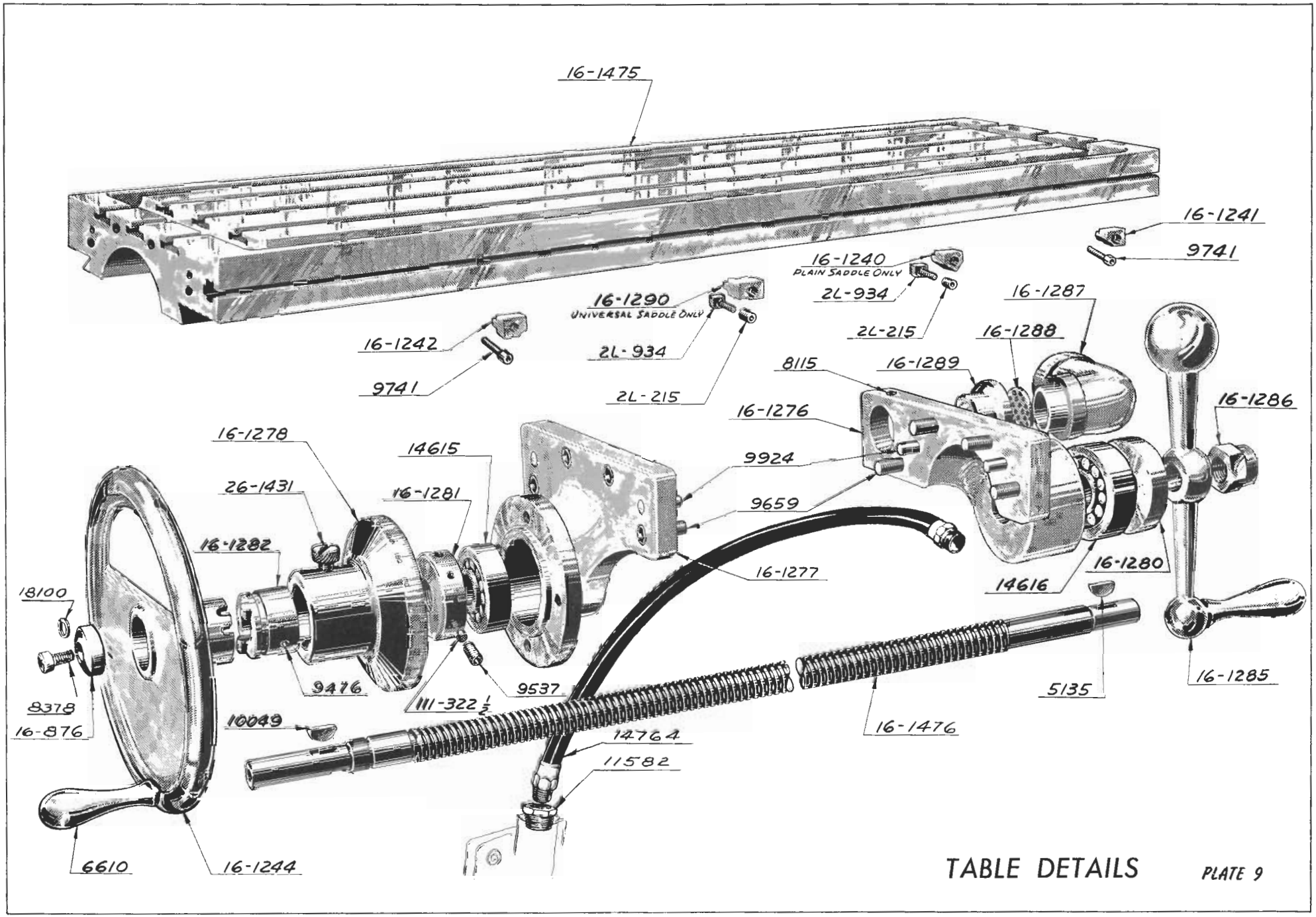

TABLE DETAILS

PLATE 9

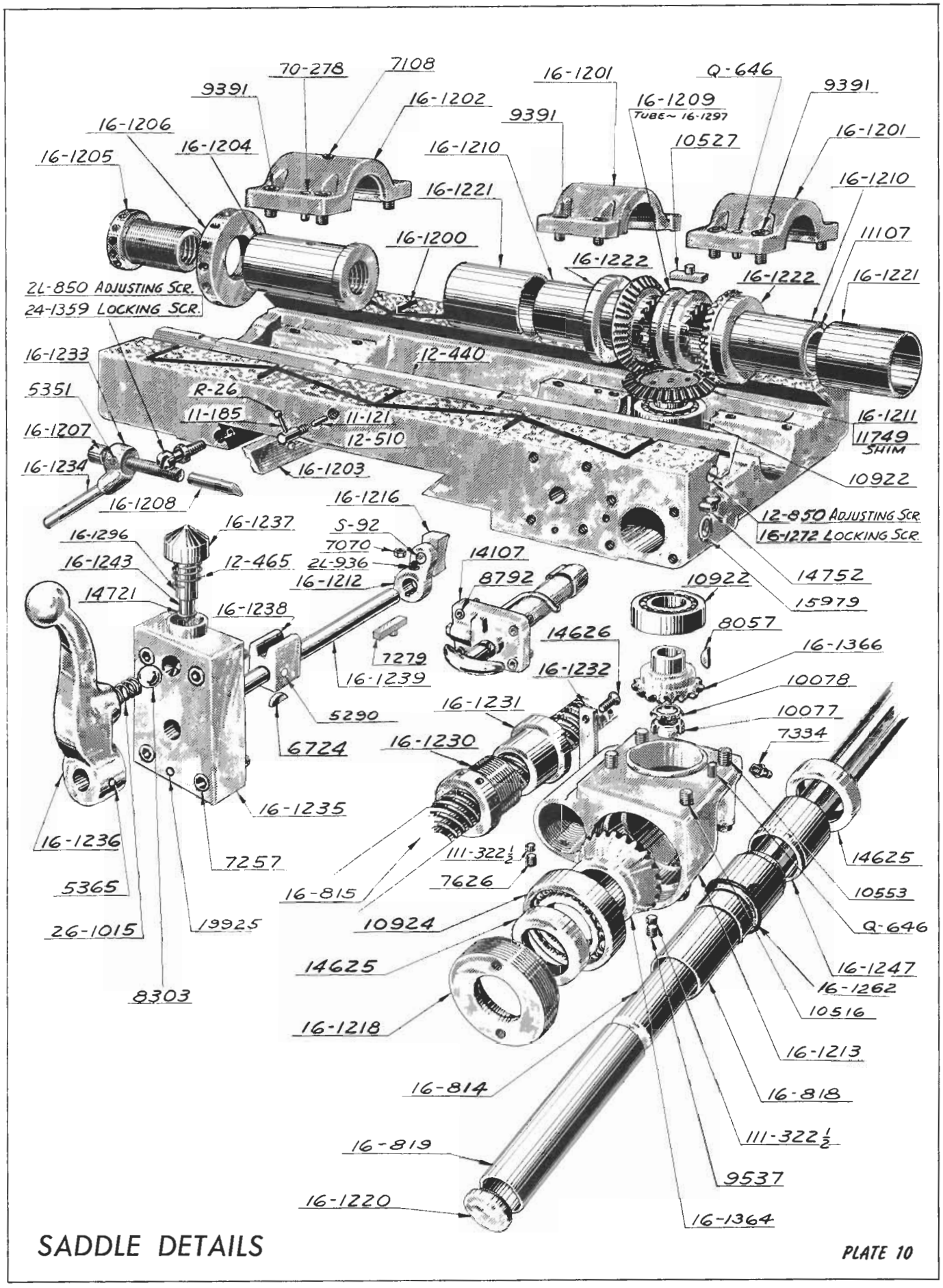

SADDLE DETAILS

PLATE 10

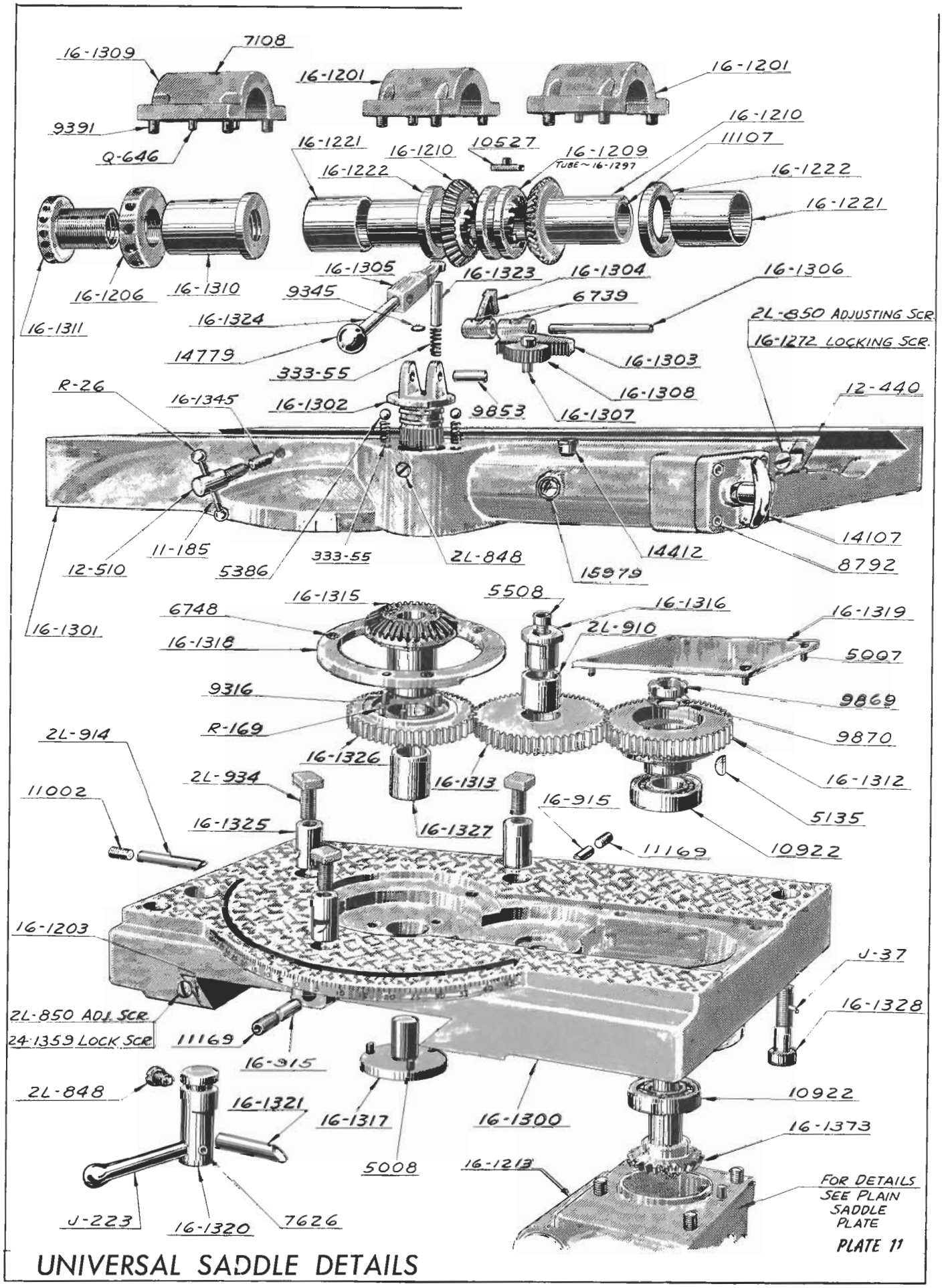

PLATE 11

UNIVERSAL SADDLE DETAILS

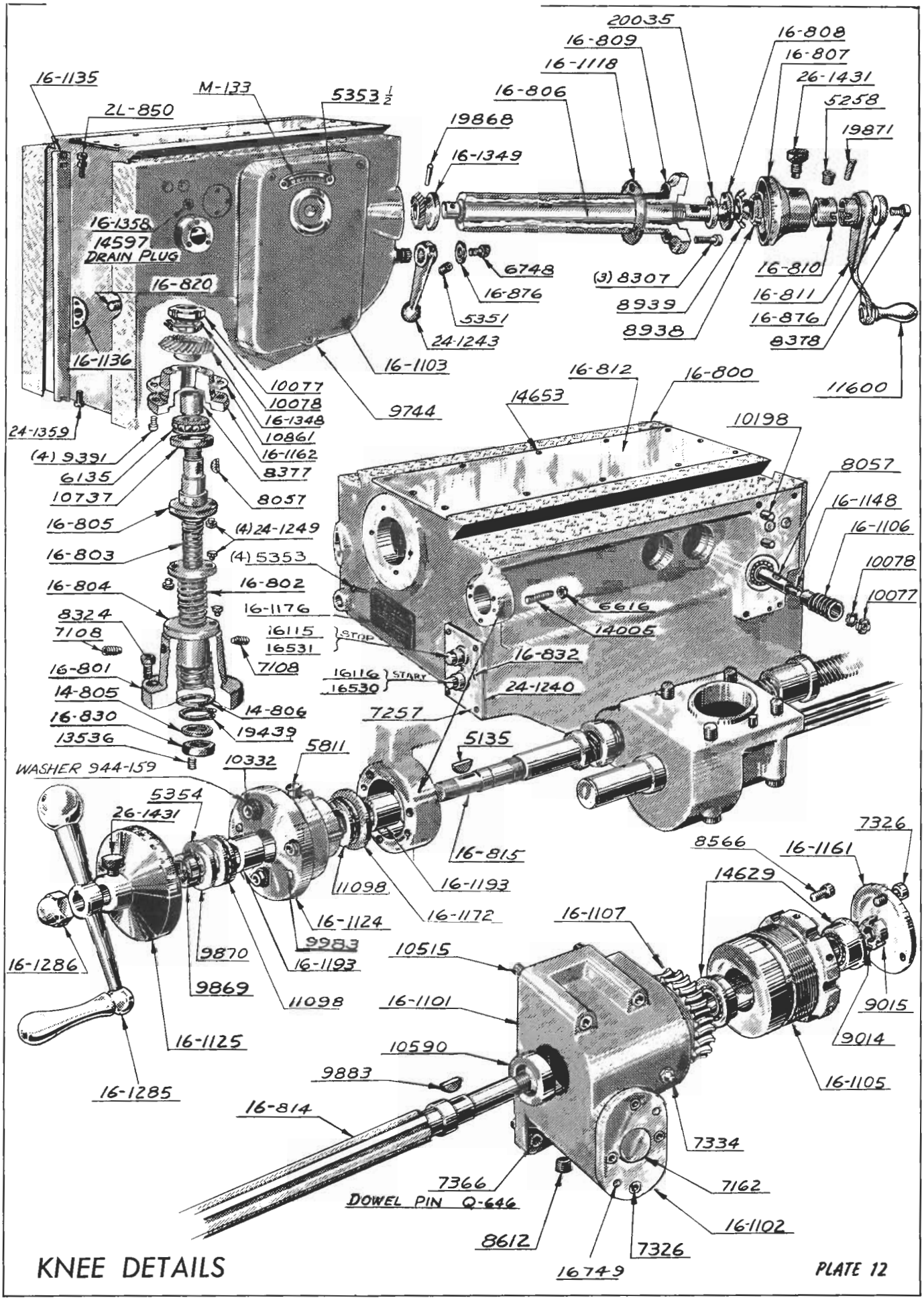

KNEE DETAILS

PLATE 12

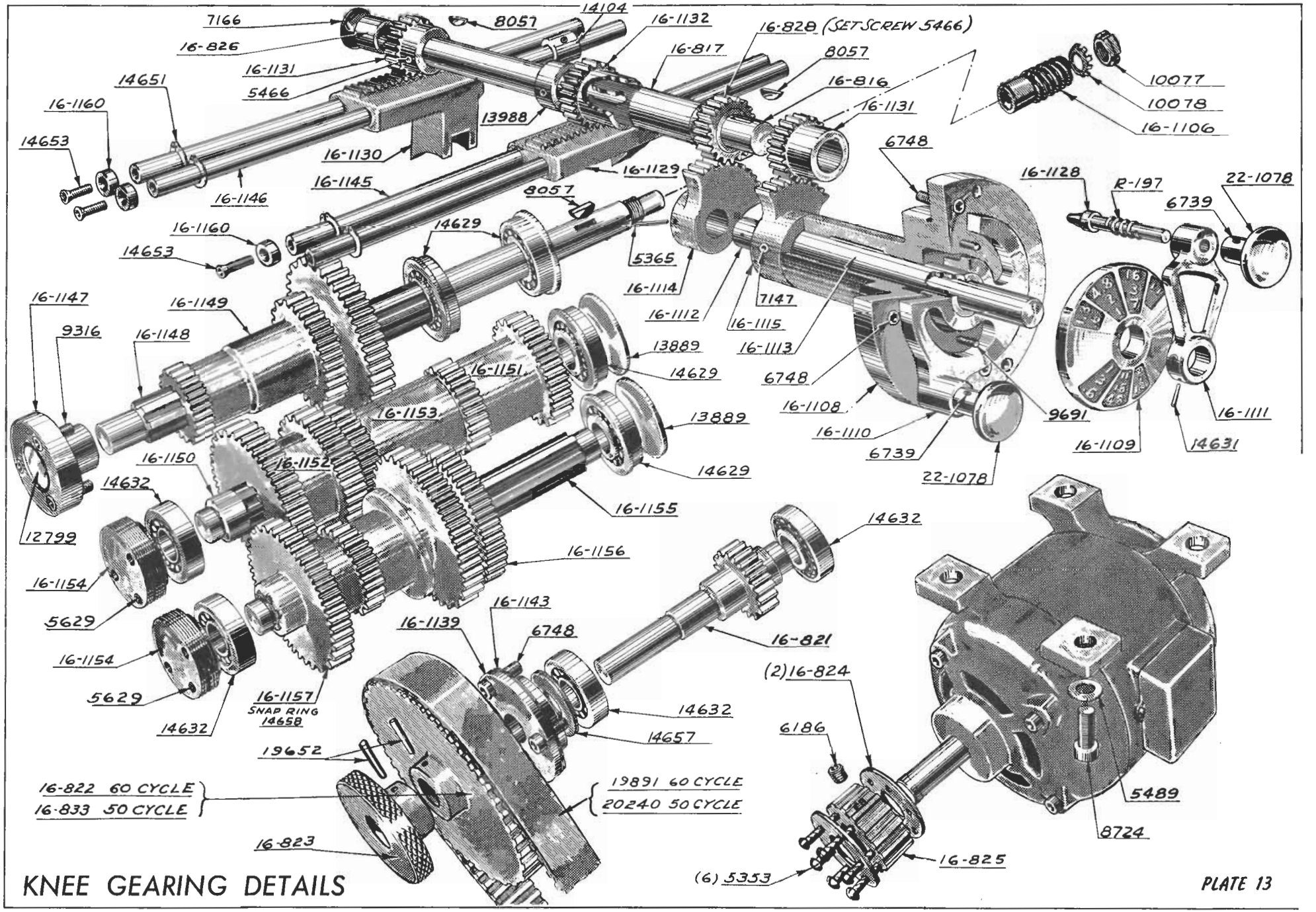

KNEE GEARING DETAILS

PLATE 13

VAN NORMAN

Nos. 16L-16M-16S Ram Type Milling Machines

Plain and Universal Models

PARTS LIST

Always Specify Model and Serial Numbers when Ordering Parts.

NOTE: Parts Numbers arranged numerically — refer to Parts Pictures first to check proper part.

VAN NORMAN MACHINE COMPANY, SPRINGFIELD 7, MASS., U. S. A.

Part No.	*Quantity*	*Name*	*Plate*
2L-162	1	Cover	1
2L-163	1	Screen	1
2L-191	1	Cover	1
2L-215	1	Nut	9
2L-848	1	Screw	11
2L-850	1	Adjusting Screw	10-11-12
2L-910	1	Bushing	11
2L-914	1	Cam	11
2L-915	2	Cam	11
2L-934	3	"T" Bolt	9-11
2L-936	1	Taper Pin	10
3-152	1	Gasket	1
11-121	1	Plug	10
11-185	1	Handle	10-11
12-440	1	Gib	10-11
12-465	1	Spring	10
12-510	1	Binder	10-11
14-685	1	Motor Pulley	1
14-686	1	Kickout Rod	1
14-687	1	Rack	1
14-688	1	Dial	1
14-689	1	Plate	1
14-690	1	Plate	1
14-691	1	Guard	1
14-805	1	Washer	12
14-806	1	Washer	12
16-500	1	Column	1
16-501	1	Base	1
16-502	1	Plate	1
16-503	1	Ram Gib	1
16-504	2	Binder	1
16-505	2	Shaft	1
16-507	1	Plate	1
16-508	1	Plate	1
16-517	1	Plate	1
16-800	1	Knee	12
16-801	1	Knee Elevating Horn	12
16-802	1	Knee Elevating Screw	12
16-803	1	Knee Elevating Screw	12
16-804	1	Nut	12
16-805	1	Collar	12
16-806	1	Shaft	12
16-807	1	Dial	12
16-808	1	Washer	12
16-809	1	Housing	12
16-810	1	Bushing	12
16-811	1	Crank	12
16-812	1	Cover	12
16-814	1	Spline Shaft	12
16-815	1	Screw	12
16-816	1	Shaft	13
16-817	1	Tube	13
16-818	1	Sleeve	10
16-819	1	Guard	10
16-820	1	Rod	12
16-821	1	Jack Shaft	13
16-822	1	Pulley	13
16-823	1	Handwheel	13
16-824	2	Flange	13
16-825	1	Pulley	13
16-826	1	Bushing	13
16-828	1	Pinion	13
16-830	1	Collar	12
16-832	1	Cover	12
16-833	1	Pulley	13
16-834	1	Cross Feed Screw	1
16-835	1	Knee Elevating Nut	1
16-836	1	Screw	1
16-837	1	Screw (Solid)	1
16-838	1	Dial	1
16-876	1	Washer	9-12
16-1003	1	Shaft	1
16-1004	1	Pinion	1, 3
16-1009	2	Screw	1
16-1018	1	Door	1
16-1021	1	Cap	1
16-1101	1	Housing	12
16-1102	1	Cover	12
16-1103	1	Guard	12
16-1105	1	Housing	12
16-1106	1	Worm	13
16-1107	1	Worm Gear	12
16-1108	1	Housing	13
16-1109	1	Dial	13
16-1110	1	Arm	13
16-1111	1	Arm	13
16-1112	1	Shifter Rod	13
16-1113	1	Tube	13
16-1114	1	Gear Segment	13
16-1115	1	Gear Segment	13
16-1118	1	Shim	12
16-1124	1	Bracket	12
16-1125	1	Dial	12
16-1128	2	Plunger	13
16-1129	1	Shifter Fork	13
16-1130	1	Shifter Fork	13
16-1131	2	Pinion	13
16-1132	1	Pinion	13
16-1135	1	Gib	12
16-1136	1	Binder	12
16-1139	1	Cap	13
16-1143	1	Shim	13
16-1145	2	Rod	13
16-1146	1	Rod	13
16-1147	1	Cap	13
16-1148	1	Worm Shaft	13
16-1149	1	Cluster Gear	13
16-1150	1	Intermediate Shaft	13
16-1151	1	Gear	13
16-1152	1	Gear	13
16-1153	1	Spacer	13
16-1154	1	Lock Nut	13
16-1155	1	Spline Shaft	13
16-1156	1	Cluster Gear	13
16-1157	1	Gear	13
16-1160	1	Washer	13
16-1161	1	Cap	12
16-1162	1	Housing	12

Part No.	Quantity	Name	Plate
16-1169	1	Dial	1
16-1172	1	Washer	12
16-1176	1	Plate	12
16-1186	1	Plate	1
16-1187	1	Plate	1
16-1188	1	Dial	1
16-1193	2	Bushing	12
16-1200	1	Saddle	10
16-1201	2	Cap	10-11
16-1202	1	Cap	10
16-1203	1	Gib	10-11
16-1204	1	Nut	10
16-1205	1	Nut	10
16-1206	1	Check Nut	10-11
16-1207	1	Screw	10
16-1208	1	Rod	10
16-1209	1	Clutch	10-11
16-1210	2	Gear	10-11
16-1211	1	Shaft	10
16-1212	1	Lever	10
16-1213	1	Housing	10
16-1216	1	Shoe	10
16-1218	1	Lock Nut	10
16-1220	1	Cap	10
16-1221	2	Bushing	10-11
16-1222	2	Washer	10-11
16-1230	1	Adjusting Nut	10
16-1231	1	Nut	10
16-1232	1	Plate	10
16-1233	1	Binder	10
16-1234	1	Handle	10
16-1235	1	Housing	10
16-1236	1	Handle	10
16-1237	1	Cap	10
16-1238	1	Block	10
16-1239	1	Shaft	10
16-1240	1	Adjustable Stop	9
16-1241	1	Positive Stop	9
16-1242	1	Positive Stop	9
16-1243	1	Plunger	10
16-1244	1	Handwheel	9
16-1247	1	Bushing	10
16-1248	1	Adjusting Nut	1
16-1249	1	Nut	1
16-1262	1	Spacer	10
16-1272	1	Lock Screw	10-11
16-1276	1	Bracket	9
16-1277	1	Bracket	9
16-1278	1	Dial	9
16-1280	1	Spacer	9
16-1281	1	Nut	9
16-1282	1	Clutch	9
16-1285	1	Ball Crank	9-12
16-1286	1	Retaining Nut	9-12
16-1289	1	Cap	9
16-1290	1	Adjustable Stop	9
16-1291	1	Dial	1
16-1292	1	Nut	1
16-1293	1	Adjusting Nut	1
16-1296	1	Bushing	10
16-1297	1	Tube	10-11
16-1300	1	Base	11
16-1301	1	Body	11
16-1302	1	Lever	11
16-1303	1	Rack	11
16-1304	1	Fork	11
16-1305	1	Body	11
16-1306	1	Shaft	11
16-1307	1	Stud	11
16-1308	1	Pinion	11
16-1309	1	Cap	11
16-1310	1	Nut	11
16-1311	1	Nut	11
16-1312	1	Gear	11
16-1313	1	Gear	11
16-1315	1	Gear and Pinion	11
16-1316	1	Stud	11
16-1317	1	Stud	11
16-1318	1	Ring	11
16-1319	1	Plate	11
16-1320	1	Binder	11
16-1321	1	Rod	11
16-1323	1	Pin	11
16-1324	1	Rod	11
16-1325	3	Binder	11
16-1326	1	Gear	11
16-1327	1	Bushing	11
16-1328	2	Lock Screw	11
16-1329	1	Nut (Universal Saddle)	1
16-1330	1	Adjusting Nut (Universal Saddle)	1
16-1345	1	Plug	11
16-1348	1	Bevel Gear	12
16-1349	1	Pinion Gear	12
16-1358	1	Plug	12
16-1364	1	Bevel Gear	10
16-1366	1	Bevel Gear	10
16-1373	1	Gear	11
16-1475	1	Table	9
16-1476	1	Feed Screw	9
16-1477	1	Feed Screw	1
16-1478	1	Table	1
16-1479	1	Key	1
16-1480	4	Tee Bolt	1
16-1483	2	Lug	1
16-1484	2	Tee Bolt	1
16-1549	1	Bushing	1
16-1552	2	Key	1
22-1078	2	Knob	13
22L-439	1	Ram Scale	1
24-1240	1	Gasket	12
24-1243	1	Handle	12
24-1249	2	Pin	12
24-1359	1	Screw	10-11-12
26-129	1	Tank Cover	1
26-137	1	Gasket	1
26-1015	1	Spring	10
26-1133	2	Spreader Spring	1
26-1431	1	Screw	9-12
70-278	2	Pin	10
111-322½	1	Plug	9-10
111-633	2	Plug	1
333-55	2	Spring	11
944-159	3	Washer	12
J-37	2	Pin	11
J-223	1	Handle	11
M-133	1	Plate	12
M-158	1	Door	1
Q-646	16	Dowel Pin	10-11-12
R-26	2	Ball	10-11
R-169	1	Dowel Pin	11
R-197	2	Spring	13
S-92	1	Pin	10
S. O.	1	⅓ H.P. Motor	13
5002	1	Screw	1
5007	4	Screw	11
5008	4	Screw	1-11
5135	1	Key	9-11-12
5258	1	Set Screw	12
5290	1	Pin	10
5351	1	Set Screw	10-12
5353	9	Att. Pin	1-12-13
5353½	2	Pin	12
5354	1	Washer	12
5365	1	Taper Pin	10-13
5386	2	Ball	11
5466	2	Set Screw	13
5489	1	Washer	13
5508	1	Screw	11
5629	1	Set Screw	13
5811	1	Oiler	12
6135	1	Bearing	12
6186	1	Set Screw	13
6610	1	Handle	9
6616	1	Check Nut	12
6724	1	Key	10
6739	2	Screw	11-13
6748	4	Screw	11-12-13
7070	1	Nut	10
7098	1	Lock Screw	1
7108	2	Set Screw	1-10-11-12
7147	1	Screw	13
7162	1	Plug	12
7163	2	Expansion Plug	1
7166	1	Welch Plug	13
7257	4	Att. Screw	10-12
7279	1	Key	10
7326	4	Screw	12
7334	1	Grease Fitting	10-12

Part No.	Quantity	Name	Plate
7366	4	Screw — Short	1-12
7626	1	Set Screw	10-11
8057	2	Key	10-12-13
8115	1	Screw	9
8303	1	Ball	10
8307	3	Screw	12
8324	4	Screw	1-12
8377	1	Bushing	12
8378	1	Screw	9-12
8566	1	Set Screw	12
8612	1	Plug	12
8628	2	Screw	1
8724	4	Screw	13
8792	4	Screw	10-11
8938	1	Lock Nut	12
8939	1	Washer	12
9014	1	Washer	12
9015	1	Lock Nut	12
9204	1	Screw	1, 3
9316	3	Screw	11-13
9345	1	Plug	11
9391	12	Screw	10-11-12
9476	1	Set Screw	9
9537	1	Set Screw	9-10
9659	4	Screw	9
9691	2	Screw	13
9741	2	Screw	9
9744	3	Att. Screw	12
9853	1	Pin	11
9869	1	Lock Nut	11-12
9870	1	Washer	11-12
9883	1	Key	12
9924	2	Dowel	9
9983	2	Dowel Pin	12
10027	2	Screw	1
10049	1	Key	9
10077	1	Lock Nut	10-12-13
10078	1	Washer	10-12
10198	1	Pin	12
10332	3	Screw	12
14107	1	Lubricator	11
10431	3	Screw	1
10515	2	Screw — Long	12
10516	3	Screw	10
10525	1	Oil Sight	11
10527	1	Key	10-11
10553	1	Screw	10
10590	1	Oil Seal	12
10737	1	Oil Seal	12
10861	1	Shim	12
10922	2	Bearing	10-11
10924	1	Ball Bearing	10
11002	1	Screw	11
11098	2	Bearing	12
11107	1	Bushing	10-11
11169	2	Screw	11
11600	1	Handle	12
11749	1	Shim	10
12799	1	Oil Sight	13
13536	1	Set Screw	12
13889	1	Welch Plug	12-13
13988	1	Collar	13
14005	1	Screw	12
14104	1	Collar	13
14107	1	Lubricator	10
14412	1	Oil Cup	11
14597	1	Plug	12
14615	1	Bearing	9
14616	1	Bearing	9
14625	2	Seal	10
14626	2	Screw	10
14629	2	Bearing	12-13
14631	1	Taper Pin	13
14632	2	Bearing	13
14651	1	Retaining Ring	13
14653	14	Screw	12-13
14657	1	Oil Seal	13
14658	1	Snap Ring	13
14721	1	Ring	10
14752	1	Oil Cup	10
14779	1	Ball	11
14959	1	Knob	1
15260	4	Screw	1
15948	2	Screw	1
15979	1	Oil Sight	10
16115	1	Push Button (Red)	12
16116	1	Push Button (Black)	12
16530	1	Plate (Start)	12
16531	1	Plate (Stop)	12
16749	2	Dowel Pin	12
18100	1	Lock Washer	9
19099	4	Screw	1
19439	1	Retaining Ring	13
19652	1	Pin	13
19868	1	Pin	12
19871	1	Pin	12
19891	1	Belt	13
19925	1	Dowel Pin	10
20035	1	Oil Seal	12
20240	1	Belt	13
20302	1	Belt	1

16L ONLY — RAM 14-7601:

2-562	1	Plug	8
12-524	2	Stop	7
12-709	1	Binder	7
12-837	3	Washer	7
12-1193	1	Bushing	7
12-1194	1	Nut	7
14-401	1	Cover	7
14-402	2	Name Plate	7
14-403	1	Lever	7
14-404	1	Lever	7
14-405	1	Yoke	8
14-407	1	Pulley	8
14-408	1	Guard	7
14-411	1	Shaft	8
14-412	1	Clutch	8
14-413	1	Key	7
14-414	1	Pinion	7
14-415	2	Gasket	7
14-416	1	Gasket	7
14-417	1	Shaft	7
14-419	1	Gear	8
14-420	1	Shaft	8
14-421	1	Gear	8
14-422	1	Gear	8
14-425	1	Binder	7
14-426	1	Bushing	7
14-427	1	Plate	7
14-428	2	Shoe	7
14-430	1	Sleeve	7
14-431	1	Bushing	7
14-434	1	Stop Button	7
14-435	1	Spacer	7
14-438	1	Cap	8
14-441	1	Washer	8
14-442	1	Shim	8
14-444	1	Cap	8
14-445	1	Shim	8
14-448	1	Spacer	8
14-600	1	Ram	7
14-601	1	Shaft	8
14-602	1	Swivel Ring	8
14-603	1	Washer	8
14-604	1	Spacer	8
14-605	1	Adapter	8
14-606	1	Cover	7
14-607	1	Pulley	7
14-608	1	Plate	7
14-609	1	Plate	7
14-683	1	Pulley	7
14-684	1	Pulley	8
16-1061	2	Screw	7
16-1064	1	Pointer	7
16-1091	2	Screw	7
16-1128	1	Plunger	7
16-1375	1	Rack	7
16-1545	1	Nut	7
22-1078	1	Knob	7
22L-184	1	Scale	7
26-405½	1	Medallion	7
26-1092	2	Shoe	8
26-1093	2	Pivot	8
38-412	4	Washer	7
J-223	1	Handle	7
JB-553	2	Dowel Pin	7

Part No.	Quantity	Name	Plate
K-221	1	Overarm	7
R-197	1	Spring	7
5002	2	Screw	7
5008	16	Screw	7
5150	4	Screw	7
5351	1	Set Screw	7
5353	9	Pin	7
5873	1	Set Screw	7
5889	4	Washer	7
6029	2	Nut	7
6748	5	Screw	7-8
6977	1	Screw	7
7165	1	Welch Plug	8
7211	2	Nut	7
7283	3	Screw	7
7366	4	Screw	7-8
8324	3	Screw	7
8773	2	Plug	7
8792	6	Screw	7
9198	1	Set Screw	7
9442	2	Plug	7
9869	1	Locknut	8
9870	1	Washer	8
10018	1	Washer	8
10019	1	Locknut	8
10049	2	Key	7
10342	1	Plug	7
11093	1	Screw	7
11100	1	Set Screw	7
12049	2	Washer	8
12064	1	Breather	7
12799	1	Oil Sight	7
13939	2	Bearing	8
15346	1	Set Screw	7
15553	1	Seal	8
19449	1	Vee Belt	7
19451	2	Bearing	8
19452	1	Seal	8
19453	1	Bearing	8
19454	1	Key	8
19455	2	Bearing	8
19458	1	Pin	7
19948	2	Bearing	8

16S MILLER ONLY — RAM 14-7600:

Part No.	Quantity	Name	Plate
2-562	1	Plug	8
12-524	2	Stop	7
12-709	1	Binder	7
12-837	3	Washer	7
12-1193	1	Bushing	7
12-1194	1	Nut	7
14-401	1	Cover	7
14-402	2	Name Plate	7
14-403	1	Lever	7
14-404	1	Lever	7
14-405	1	Yoke	8
14-407	1	Pulley	8
14-408	1	Guard	7
14-409	1	Shaft	8
14-411	1	Shaft	8
14-412	1	Clutch	8
14-413	1	Key	7
14-414	1	Pinion	7
14-415	2	Gasket	7
14-416	1	Gasket	7
14-417	1	Shaft	7
14-418	1	Adapter	8
14-419	1	Gear	8
14-420	1	Shaft	8
14-421	1	Gear	8
14-422	1	Gear	8
14-423	1	Plate	7
14-425	1	Binder	7
14-426	1	Bushing	7
14-427	1	Plate	7
14-428	2	Shoe	7
14-430	1	Sleeve	7
14-431	1	Bushing	7
14-434	1	Stop Button	7
14-435	1	Spacer	8
14-437	1	Gasket	8
14-438	1	Cap	7
14-441	1	Washer	8
14-442	1	Shim	8
14-444	1	Cap	8
14-445	1	Shim	8
14-448	1	Spacer	8
14-453	1	Swivel Ring	8
14-454	1	Spacer	8
14-600	1	Ram	7
14-603	1	Washer	8
14-606	1	Cover	7
14-607	1	Pulley	7
14-609	1	Plate	7
16-1061	2	Screw	7
16-1064	1	Pointer	7
16-1091	2	Screw	7
16-1128	1	Plunger	7
16-1375	1	Rack	7
16-1545	1	Nut	7
22-1078	1	Knob	7
22L-184	1	Scale	7
26-405½	1	Medallion	7
26-1092	2	Shoe	8
26-1093	2	Pivot	8
38-412	4	Washer	7
J-223	1	Handle	7
JB-553	2	Dowel Pin	7
K-221	1	Overarm	7
Q-646	1	Pin	8
R-197	1	Spring	7
S. O.	1	2 H.P. Motor	7
5002	2	Screw	7
5008	16	Screw	7
5150	4	Screw	7
5351	1	Set Screw	7
5353	9	Pin	7
5873	1	Set Screw	7
5889	4	Lock Washer	7
6029	2	Nut	7
6748	5	Screw	7-8
6977	1	Set Screw	7
7211	2	Nut	7
7282	4	Screw	8
7283	3	Screw	7
7366	4	Screw	7
8324	3	Screw	7
8792	6	Screw	7
9198	1	Set Screw	7
9442	2	Plug	7
9869	1	Lock Nut	8
9870	1	Lock Washer	8
10018	1	Washer	8
10019	1	Lock Nut	8
10049	2	Key	7
10259	1	Nut	7
10260	3	Bushing	7
10261	4	Sleeve	7
10342	1	Plug	7
10635	1	Adapter	7
10647	1	Hose	7
10825	4	Lock Washer	8
11093	1	Set Screw	7
11100	1	Screw	7
12049	2	Lock Washer	8
12064	1	Breather	7
12345	1	Adapter	8
12767	4	Screw	8
12799	1	Oil Sight	7
13939	2	Bearing	8
15346	1	Screw	7
15846	1	Adapter	8
15852	2	Adapter	8
16437	5	Nut	8
19449	1	Vee Belt	7
19450	1	Pump	8
19451	2	Bearing	8
19452	1	Seal	8
19453	1	Bearing	8
19454	1	Key	8
19455	2	Bearing	8
19457	1	Pin	8
19458	1	Pin	7
19463	1	Sight Gauge	7
19464	1	Tee	8
19465	1	Nipple	8
19466	1	Nipple	8

Part No.	Quantity	Name	Plate
19665	1	Adapter	7
19948	2	Bearing	8

16M MILLER ONLY — 16-7750 RAM:

Part No.	Quantity	Name	Plate
12-278	1	Cover	4
12-286	1	Rack	4
12-287	1	Rack	4
12-314	4	Shaft	4
12-524	2	Stop	3
12-534	1	Gasket	4
12-538	1	Gasket	4
12-709	1	Binder	3
12-837	3	Washer	3
12-1193	1	Bushing	7
12-1194	1	Bushing	3
16-750	1	Ram	3
16-751	1	Guard	3
16-752	1	Pulley	4
16-753	1	Pulley	3
16-754	1	Pulley	3
16-755	1	Plate	3
16-756	1	Swivel Ring	4
16-757	1	Plug	4
16-758	1	Shifting Sector	4
16-759	1	Pin	4
16-761	1	Cap	4
16-762	1	Cap	4
16-763	1	Shaft	4
16-764	1	Plate	3
16-765	1	Guard	3
16-823	1	Handwheel	4
16-1026	1	Cover	4
16-1027	1	Cover	4
16-1028	1	Cover	4
16-1029	1	Lever	4
16-1030	1	Lever	4
16-1031	1	Bushing	4
16-1036	1	Key	3
16-1040	1	Shifting Sector	4
16-1042	1	Cap	4
16-1045	1	Shim	4
16-1046	1	Shim	4
16-1047	1	Shaft	4
16-1049	1	Shaft	4
16-1050	1	Gear Cluster	4
16-1051	1	Gear	4
16-1052	1	Gear	4
16-1053	1	Gear	4
16-1054	1	Cluster Gear	4
16-1055	1	Plug	4
16-1058	1	Binder	3
16-1061	2	Stud	3
16-1063	2	Screw	4
16-1064	1	Pointer	3
16-1091	2	Screw	3
16-1175	1	Plate	3
16-1177	1	Plate	4
16-1375	1	Rack	3
16-1545	1	Binder	3
16-1546	1	Bushing	3
22-1023	1	Plunger	4
22-1026	1	Spring	4
22-1078	1	Knob	4
22L-184	1	Scale	7
22L-426	2	Rod	3
26-405½	1	Medallion	3
38-412	4	Washer	3
96-577	1	Bushing	4
111-290	1	Screw	4
111-318	1	Screw	4
J-223	1	Handle	3
JB-553	2	Dowel	3
K-221	1	Overarm	3
Q-312	1	Screw	4
Q-646	2	Dowel	4
5002	2	Screw	3
5150	4	Screw	3
5180	4	Screw	3
5353	9	Pin	3
5583	4	Washer	3
5629	4	Screw	4
5873	1	Set Screw	3
5889	4	Washer	3
6748	5	Screw	3-4
6905	5	Screw	3
7162	4	Plug	4
7211	2	Nut	3
8158	5	Screw	3-4
9442	1	Plug	3
9524	4	Screw	4
9537	1	Screw	3
9869	1	Nut	4
9870	1	Washer	4
10784	1	Key	4
11906	1	Set Screw	4
12064	1	Vent	4
12192	2	Screw	3
12799	1	Oil Sight	3
13917	2	Bearing	4
13919	1	Bearing	4
13920	1	Shim	4
14637	1	Oil Seal	4
14639	1	Oil Seal	4
15346	1	Screw	4
19255	1	Pin	4
19652	1	Pin	4
19934	1	Pin	4
19954	1 set	Belt	3
19955	1 set	Belts	3
19956	1	Ring	4
20036	1	Bearing	4
20487	1 set	Belt	3

16L MILLER CUTTERHEAD 14-7650 — 16M MILLER CUTTERHEAD 14-7654:

Part No.	Quantity	Name	Plate
12-627	2	Stop Button	2
12-744	2	Tongue	2
14-650	1	Cutterhead	2
14-651	1	Cover	2
14-652	1	Plate	2
14-653	1	Spindle	2
14-654	1	Gear (for 16M Only)	2
14-655	4	Washer	2
14-656	1	Cap	2
14-657	1	Labyrinth	2
14-658	1	Draw Bar	2
14-659	1	Nut	2
14-660	1	Nut	2
14-661	1	Locknut	2
14-662	2	"T" Bolt	2
14-663	2	"T" Bolt	2
14-664	2	Nut	2
14-665	2	Nut	2
14-666	1	Gear (for 16L Only)	2
14-667	1	Pinion (for 16L Only)	8
14-668	1	Gasket	2
16-1347	1	Pinion (for 16M Only)	2
22-1197	1	Plate	2
38-709	2	Key	2
111-633	2	Plug	2
111-5666	1	Knob	2
BRW-87	4	Spring	2
E-37½	1	Key	2
J-220	1	Washer	2
5353	2	Pin	2
5508	6	Screw	2
5629	1	Screw	2
5873	2	Screw	2
7284	2	Screw	2
8194	1	Plug	2
8378	3	Screw	2
8773	2	Plug	2
8792	5	Screw	2
10881	1	Dowel	2
14597	1	Plug	2
14724	1	Oil Sight	2
15243	4	Screw	2
19930	1	Bearing	2
19931	1	Bearing	2
19932	1	Oil Seal	2
19933	1	Oil Seal	2
19934	1	Pin	2

QUILL FEED CUTTERHEAD 14-7700 WITH No. 30 NMTB SPINDLE NOSE — 16S ONLY:

Part No.	Quantity	Name	Plate
12-627	2	Stop	5
14-669	1	Handwheel	6
14-670	1	Sleeve	6
14-676	1	Gasket	5
14-681	2	Plug	6
14-682	1	Collar	6
14-698	1	Screw	5
14-699	1	Guard	6
14-700	1	Cutterhead	5
14-701	1	Cap	5
14-702	1	Cap	6
14-703	1	Cover	5
14-704	1	Cartridge	6
14-706	1	Lever	5
14-707	1	Lever	5
14-709	1	Spindle	6
14-710	1	Bushing	6
14-711	1	Bushing	6
14-712	1	Bushing	6
14-714	1	Plate	5
14-718	1	Housing	6
14-719	1	Cap	6
14-722	1	Closure	6
14-723	1	Cap	6
14-724	1	Worm	6
14-725	1	Gear	6
14-726	1	Shaft	6
14-727	1	Gear	6
14-729	1	Shoe	5
14-730	1	Cover	5
14-731	1	Cap	6
14-732	1	Nut	6
14-733	2	Collar	6
14-734	1	Worm	6
14-735	1	Gear	6
14-736	1	Screw	5
14-737	1	Cover	5
14-738	1	Spring	6
14-740	1	Collar	6
14-741	1	Washer	6
14-742	1	Bushing	6
14-743	1	Bushing	6
14-744	4	Tee Bolt	5
14-745	1	Rack	5
14-746	1	Sleeve	5
14-747	1	Rack	5
14-748	1	Bushing	6
14-749	1	Cap	6
14-750	1	Nut	5
14-751	1	Bushing	5
14-754	1	Detent	6
14-755	1	Spacer	6
14-756	1	Collar	5
14-757	1	Dial	5
14-758	1	Clutch	6
14-759	1	Clutch	6
14-760	1	Fulcrum	5
14-761	1	Arm	5
14-762	1	Pinion	5
14-763	1	Pinion	5
14-764	1	Gear	5
14-766	1	Shaft	6
14-767	1	Cap	6
14-768	1	Draw Bar	5
14-769	2	Gear	6
14-770	2	Bushing	6
14-771	1	Gear	6
14-772	1	Gear	6
14-773	1	Gear	6
14-774	1	Cap	6
14-776	1	Quill	6
14-777	1	Knob	5
14-778	1	Nut	6
14-779	1	Shim	6
14-780	1	Key	6
14-781	1	Spring	6
14-782	1	Spring	5
14-788	1	Pinion	6
14-789	1	Clutch	6
14-790	1	Collar	6
14-791	1	Bushing	6
14-792	1	Lever	6
14-793	1	Spring	5
14-794	6	Spring	6
14-795	1	Plate	5
14-796	1	Plate	5
14-797	1	Sleeve	6
14-798	1	Plate	5
14-799	1	Shaft	6
14-808	1	Gear	6
14-809	1	Pinion	8
16-1128	1	Plunger	5
16-1184	2	Lug	6
18F-1233	1	Key	6
22-1078	1	Knob	5-6
111-322½	1	Plug	6
111-386	1	Plug	5
120-444	1	Spring	5
J-339	4	Washer	5
M-250	1	Detent	6
Q-646	2	Dowel Pin	5
R-92	1	Pin	5
T-97	1	Spring	6
5007	4	Screw	5-6
5275	12	Ball	6
5286	1	Detent Ball	5
5353	4	Pin	5
5386	1	Ball	5
5775	4	Screw	6
5873	1	Screw	6
6610	1	Handle	6
6748	4	Screw	6
7179	1	Key	5
7180	1	Key	6
7272	1	Screw	5
7326	3	Screw	6
7334	1	Grease Fitting	5
7599	1	Key	6
8057	1	Key	6
8303	1	Ball	5
8773	3	Plug	6
8792	4	Screw	6
9316	4	Screw	5-6
9442	1	Plug	5
9537	1	Set Screw	6
9663	1	Screw	5
10019	1	Lock Nut	6
10049	2	Key	6
10431	1	Screw	5
10695	1	Oil Seal	6
10928	1	Oil Seal	6
12120	1	Lock Washer	6
12253	1	Spring	5
12767	4	Screw	6
13563	2	Dowel Pin	6
14597	1	Plug	5
14804	1	Pin	6
14970	2	Bearing	6
15346	1	Screw	5-6
15743	1	Oil Seal	6
16074	1	Retaining Ring	5
16525	1	Ring	5
16711	1	Ring	5
17231	2	Ring	5
17610	1	Retaining Ring	6
18359	1	Retaining Ring	6
18432	1	Nut	6
18449	1	Plug	6
18997	1	Retaining Ring	6
19457	1	Pin	5
19475	1	Bearing	6
19476	1	Bearing	6
19477	1	Oil Seal	6
19479	1	Pin	5-6
19485	2	Retaining Ring	6
19656	1	Retaining Ring	6
19905	3	Screw	5
20242	1	Oil Seal	6
20243	1	Oil Seal	5
20244	1	Oil Seal	5
20380	4	Nut	5

Part No.	Quantity	Name	Plate
QUILL FEED CUTTERHEAD 14-7679 WITH VAN NORMAN "C" STYLE SPINDLE NOSE:			
12-744	1	Lug	6
14-679	1	Spindle	6
14-680	1	Draw Bar	5
E-37½	1	Key	6
J-220	1	Washer	5
7284	1	Screw	6
16L AND 16S MILLER ARBOR SUPPORT (PILOT TYPE) 14-7475 — 16M MILLER ARBOR SUPPORT (PILOT TYPE) 16-71074:			
2-146	1	Plunger	3
3-168	1	Sleeve	3
14-475	1	Support (16L and 16S Millers Only)	3
16-1074	1	Support (16M Miller Only)	3
22L-1247	2	Cap	3
26-624	1	Filler Plug	3
40-33	2	Plug	3
118-789	1	Bushing	3
120-142	1	Spring	3
5007	8	Screw	3
6365	1	Screw	3
8612	1	Plug	3
10452	2	Bearing	3
10756	2	Spacer	3
11305	2	Screw	3
12113	1	Bearing	3
14724	1	Oil Sight	3
14749	1	Oil Seal	3
OUTER BRACE 16-7850 STANDARD EQUIPMENT ON 16M AND 16S MILLERS:			
2L-174	1	Plug	1
16-850	1	Outer Brace	1
J-339	1	Washer	1
5177	1	Bolt	1
9648	1	Screw	1
STANDARD EQUIPMENT:			
22-1160	1	⅝" Hand Crank	1
111-200	1	Lever Pin	1
C-430	1	½" dia. "C" Collet (16L and 16M Miller Only)	1
5316	1	5/16" Allen Wrench	1
5318	1	7/32" Hex Allen Wrench (Universal Saddle Only)	1
6813	1	⅜" Allen Wrench	1
18445	1	⅞" and 1" Double Open End Wrench (16S Only)	1
20268	1	No. 7 B&S Collet Adapter No. 37B (16S Only)	1
20275	1	½" dia. B&S Collet No. 724-112 (16S Only)	1
COOLANT 16-7506A:			
12-925	1	Nipple	1
16-506	1	Hose	1
16-515	1	Bushing	1
16-1068	1	Bracket	1
16-1069	1	Screw	1
16-1070	1	Handle	1
16-1287	1	Elbow	9
16-1288	1	Strainer	9
24-1008	1	Bracket	1
24-1010	1	Bracket	11
7282	4	Screw	1
7626	1	Screw	1
9449	1	Nipple	1
10471	2	Clamp	1
10549	1	Flexible Hose (16L-16M Only)	1
10743	1	Elbow	1
11069	2	Screw	1
11582	1	Bushing	9
11583	1	Reducer	1
14728	1	Valve	1
14764	1	Flexible Hose	9
18462	1	Nipple	1
18514	1	Coolant Pump	1
19899	1	Flexible Hose	1
20226	1	Flexible Hose (16S Only)	1
16-7509 ELECTRICAL LIST — STANDARD ELECTRICAL PANEL:			
16-509	1	Door	1
16-510	1	Gasket	1
7283	3	Screw	1
19099	2	Screw	1
19923	1	Control Panel	1
19343	7	Screw	1
16-7511 J. I. C. ELECTRICAL PANEL:			
16-511	1	Door	1
16-512	1	Door	1
16-513	1	Frame	1
16-514	1	Gasket	1
19099	14	Screw	1
19924	1	Control Panel	1

"It Pays to Van Normanize"

PRINTED IN U. S. A.