MODEL X LATHE

Operator's Manual

This manual was written for the purpose of instructing the operator of a Lodge & Shipley Model X Lathe in the proper care and operation of his machine.

At the time of writing, the manual was completely up-to-date. However, due to continual improvements in design, it is possible that descriptions contained herein may vary slightly from the machine delivered to you. This would imply nothing more than the fact that the machine has been improved to better fulfill your requirements.

THE LODGE & SHIPLEY CO.

CINCINNATI 25, OHIO, U. S. A.

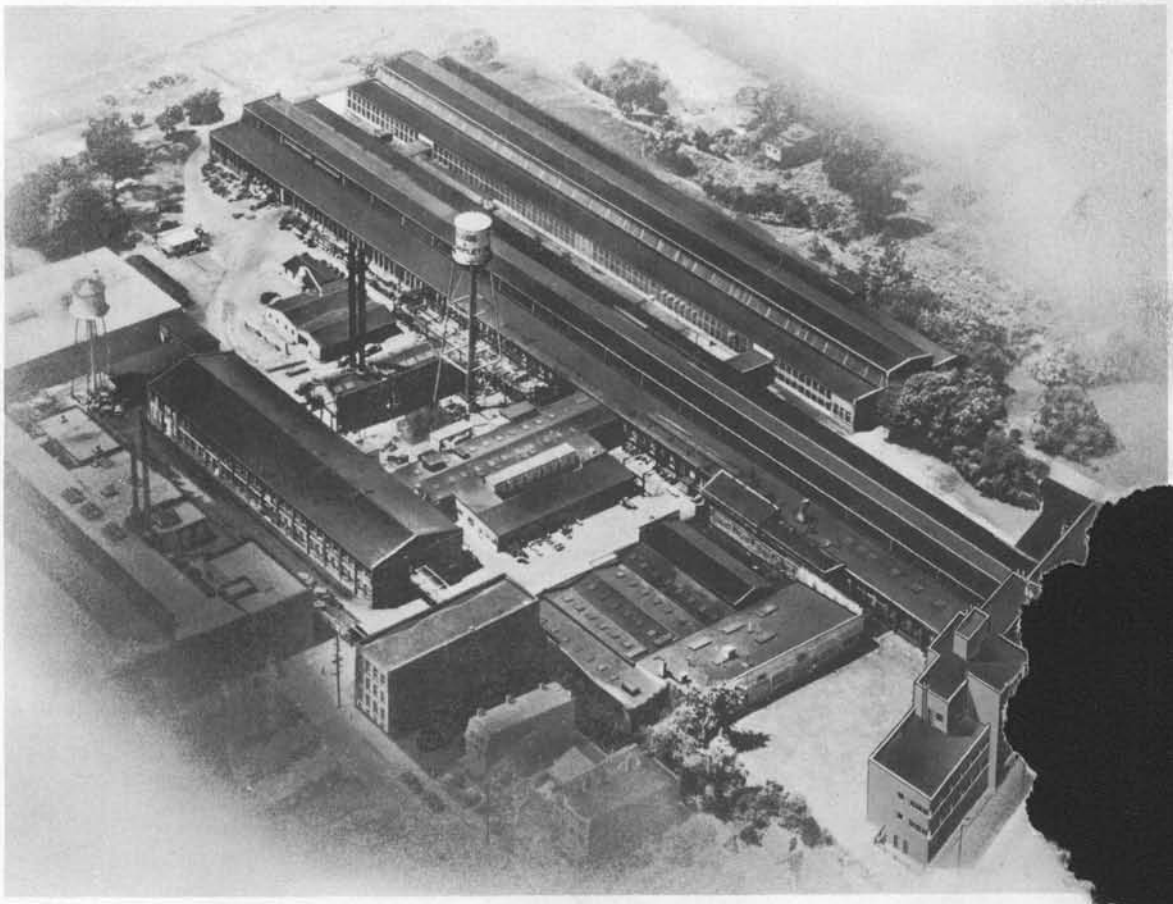

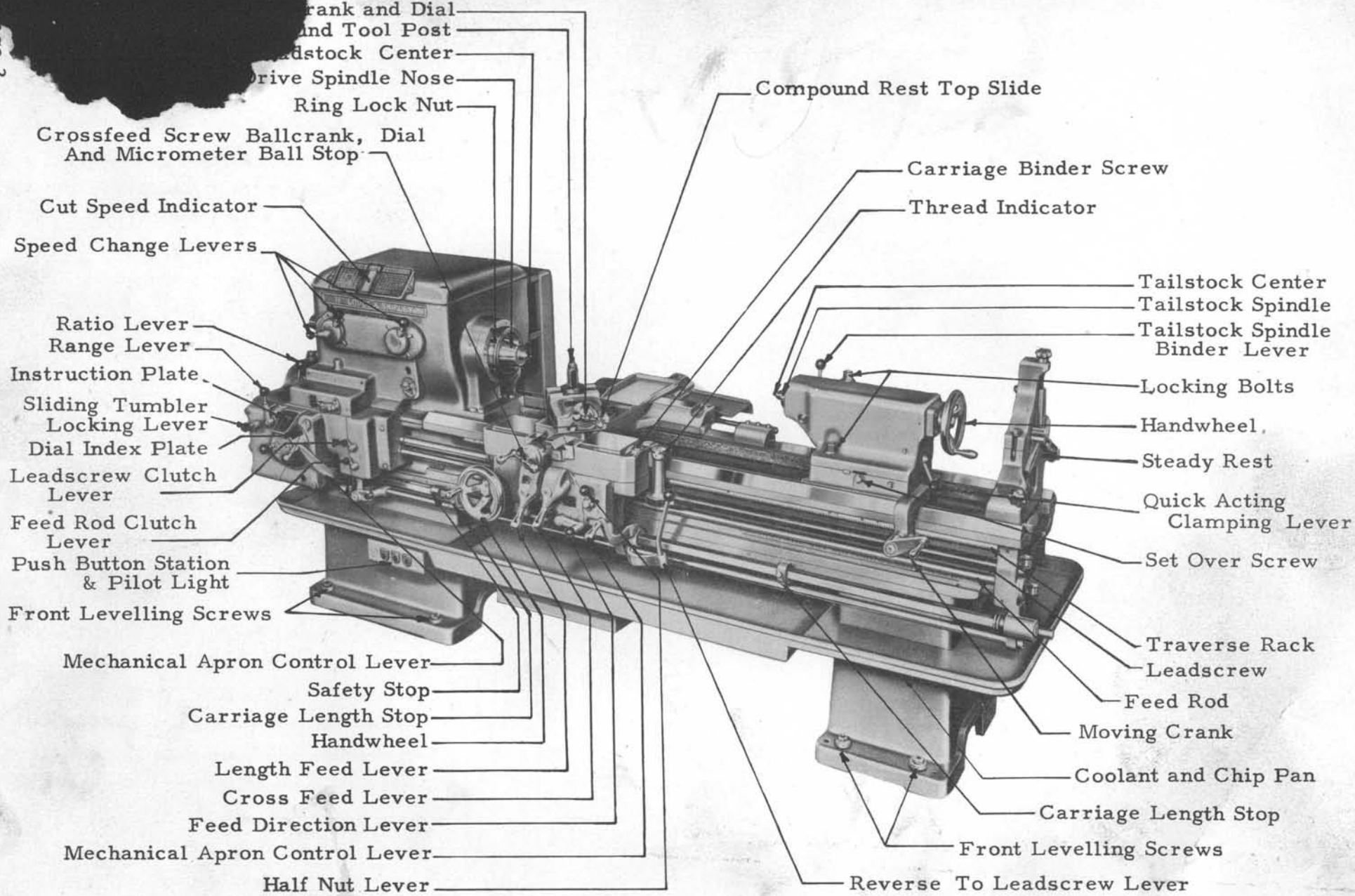

Figure 1. - Model X - 14" Heavy Duty Toolmaker Lathe.

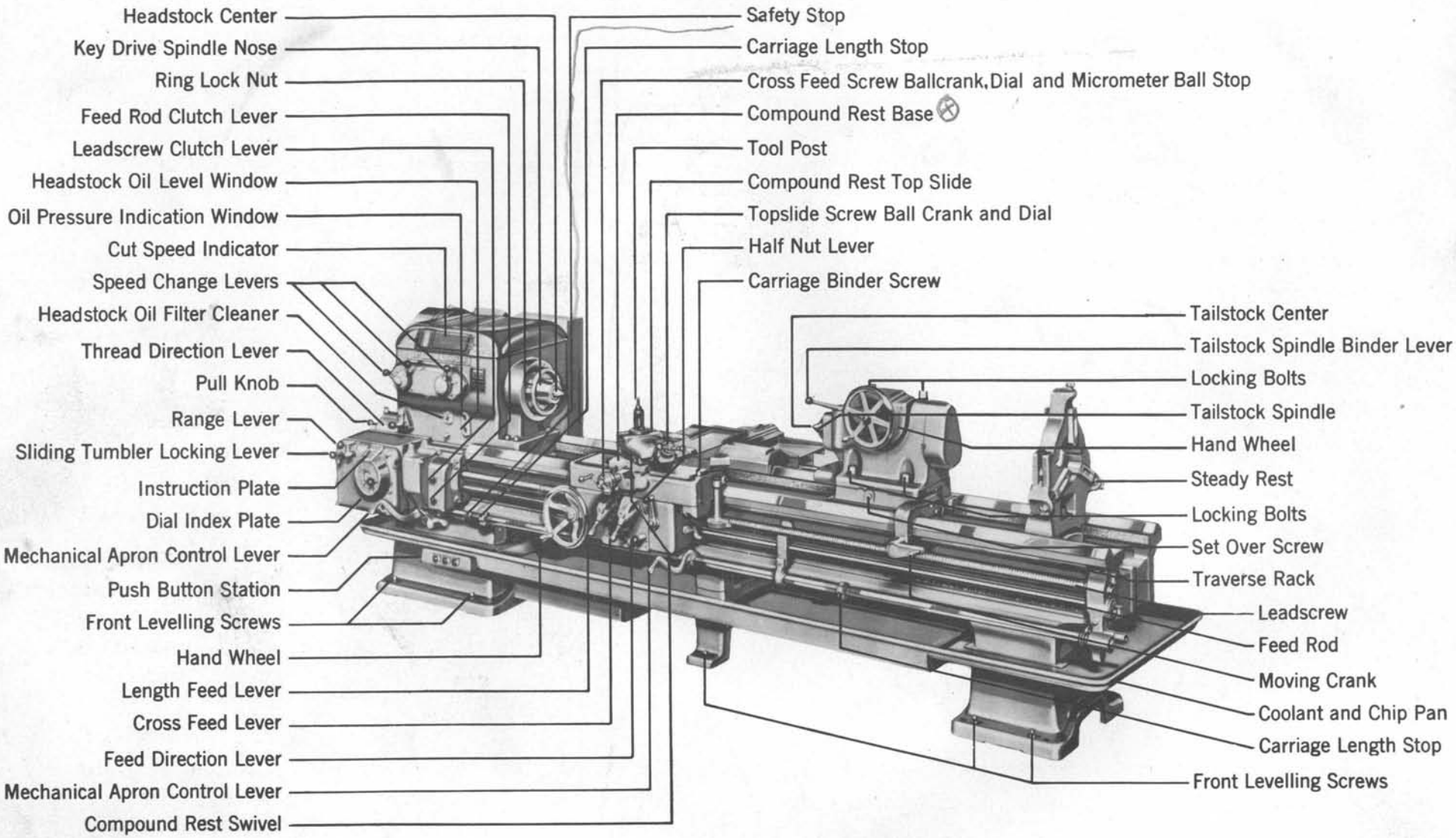

Figure 2 - Model X - 20" Heavy Duty Engine Lathe

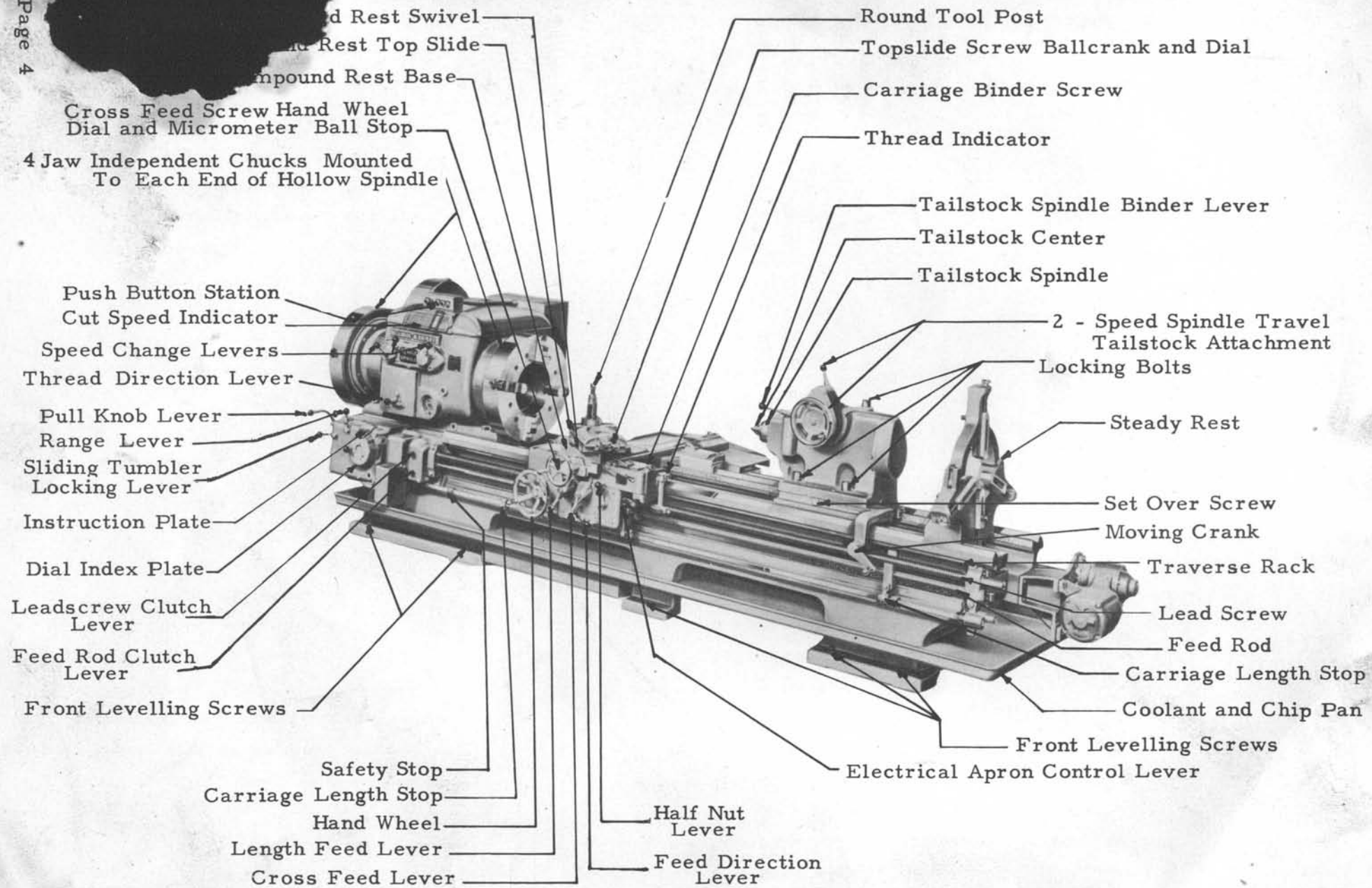

Figure 3. - Model X - 25" Heavy Duty Oil Country Lathe.

CLEANING, ERECTING AND LEVELING

For full and complete information on this subject, see bulletin entitled "Preparing Lodge & Shipley Lathes for Action".

CONNECTING ELECTRICAL EQUIPMENT

After connecting the main line wires, check the direction of pulley rotation with the indicating arrows on the face of the pulley sheave. It is important that the motor run in the proper direction.

LUBRICATION

The importance of proper lubrication cannot be over emphasized. The continued accuracy and long life of the machine depends largely upon proper lubrication at all times; so do not neglect lubrication after the machine has been installed. Lubrication of the lathe should start as soon as it has been cleaned and before any of the mechanisms are operated or any sliding units are moved. A complete lubrication chart will be found on pages 6 and 7. Refer to it frequently and follow the instructions carefully. It is very important that you use only the grades of oil which meet the specifications given, and it is certainly false economy to use any but the highest quality lubricants. The following paragraphs present a general description of the various lubrication systems.

The headstock lubrication system for the Model X 14" and 16" Heavy Duty and the 20" Standard Lathes is shown in Fig. 4. It is a forced system which operates by the action of the centrifugal pump shown, pumping the oil from a separate reservoir below and to the rear of the headstock, through a Cuno oil filter at the front of the headstock and then to the oil-distributor troughs over the top of the bearings and gearing. The oil drains from the moving parts to the bottom of the headstock and then returns to the reservoir. The headstock lubrication system for the 20" Heavy Duty Lathes and larger and the 25" Standard and Heavy Duty Oil Country Lathes is quite similar except the bottom of the headstock casting is used as the oil reservoir instead of the separate reservoir toward the rear.

The Cuno oil filter is incorporated in the system to insure the distribution of clean oil at all times. The handle of the filter should be turned frequently to clear the filter plates and allow the sludge to drop into the small reservoir immediately below the filter. The filter element should be removed and cleaned and the sludge drained by removing the plug at the bottom of the reservoir whenever the he stock reservoir is drained. If at any time the plug is removed from the reser and no oil starts to drain out immediately, it is certain that sludge has accum ated and should be cleaned out.

LUBRICATING INSTRUCTIONS AND SPECIFICATIONS

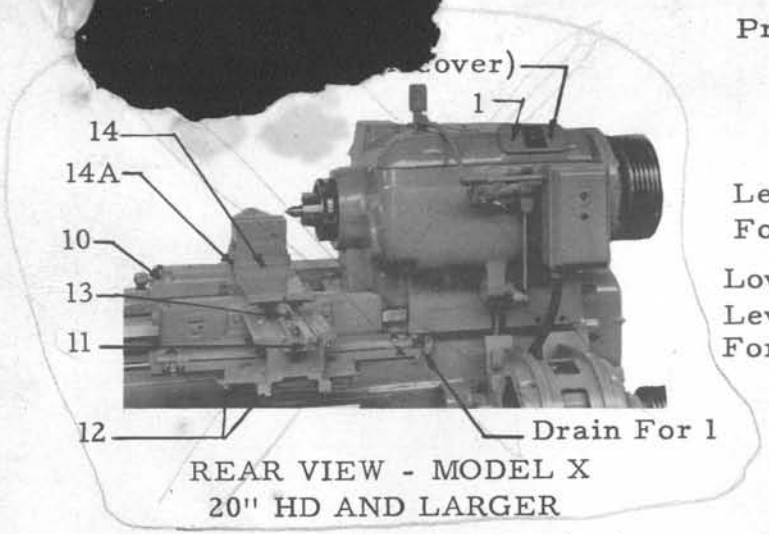

REAR VIEW - MODEL X
20" HD AND LARGER

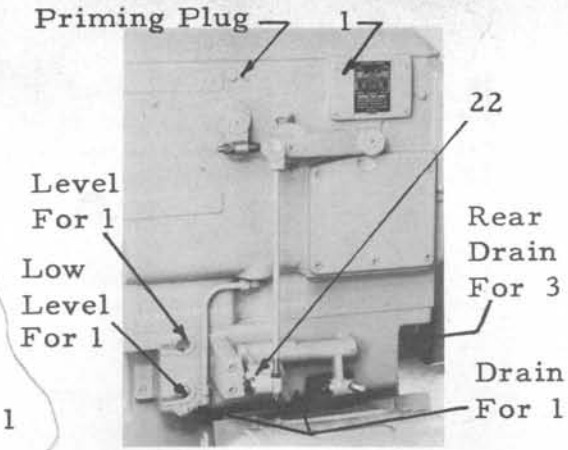

REAR VIEW - MODEL X
14", 16" & 20" STD.

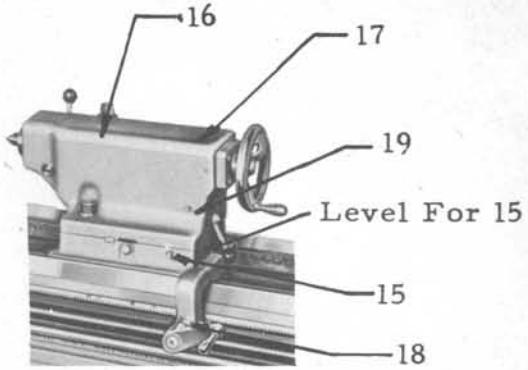

TAILSTOCK MODEL X
14", 16" & 20" STD.

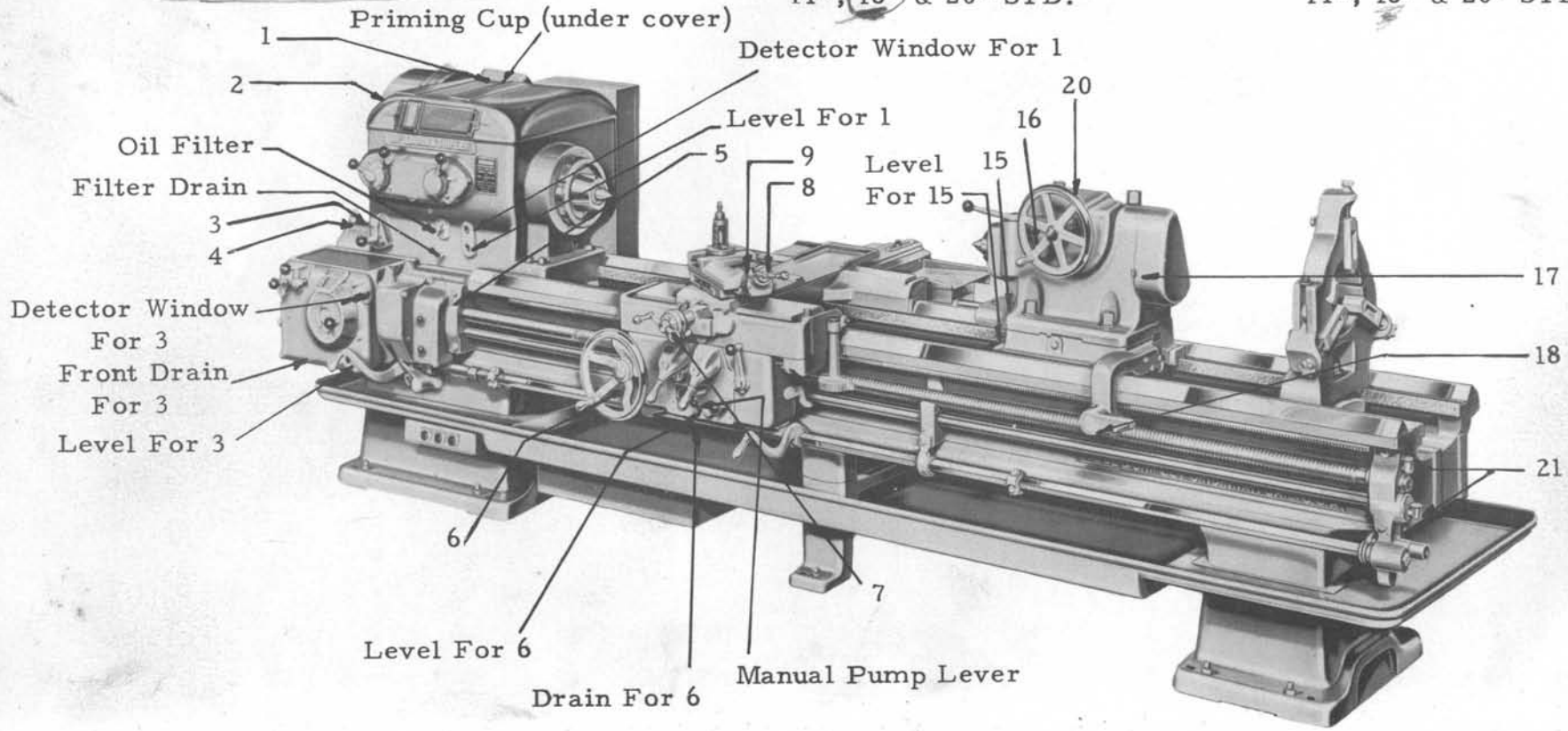

FRONT VIEW - MODEL X LATHE

LUBRICATING INSTRUCTIONS AND SPECIFICATIONS

WHEN TO OIL	STATION NUMBER	PARTS LUBRICATED	INSTRUCTIONS	SPECIFICATIONS
6 Months	1	Headstock Gearing and Bearings and Pulley Gearing	Drain and refill every 6 months. Maintain level with machine idle. Drain sludge from filter. 3 Gal. - - 14",16" HD & 20" Std. 4 1/2 Gal.- 20" HD 4 Gal. - 25" Std. 5 1/2 Gal.- 25" HD 3 1/2 Gal.- 32" Std. 8 Gal. - 25" Std.,8 7/8" HS 3 Gal. - 25" HD.,11 1/2" HS	Highly Refined Mineral Oil entirely free from acids and alkali and possessing high oxidation stability and film strength. Viscosity: 150-275 Sec. Saybolt at 100° F. A4B
6 Months	3	Quick Change Gearing and Bearings, and End Gearing and Bearings	Drain and refill every 6 months. Maintain level 1 Qt. - 14",16" HD & 20" Std. 3 Qt.- 20",25" HD & 25", 32" Std. 25" Std. 8 7/8" HS, 25" HD. 11 1/2" HS	
Daily	4	Quadrant End Gearing	Oil with a Squirt Can	
Daily	5 (20" H. D. and larger Engine, Toolmaker and Oil Country Lathes)	Leadscrew and Feed Rod Forward Bearings	Oil with a Squirt Can	
Daily	16, 17, 18, 19, 21 & 22	Miscellaneous	Oil with a Squirt Can	
Daily	20 (2-Speed Tailstock)	Bearings for Counter and Reduction Unit	Oil with a Squirt Can	
When Required	6	Apron Gears & Bearings, Bedways & Cross Slide Ways	1/2 Pt. 14",16" HD & 20" Std. 3/4 Pt. 20",25" HD& 25"& 32" Std. 3/4 Pt. 25" Std. 8 7/8" HS, 3/4 Pt. 25" HD 11 1/2"HS	Special extreme pressure noncorrosive Way Oil containing a sulphur base and a tacky additive. Viscosity: 300-350 Sec. Saybolt at 100° F. Examples: Sun Oil Co. Way Lubricant (P-47) Socony-Vacuum Oil Co. Vactra #2. use A4B
When Required	15	Inner Bedways for Tailstock	Maintain level. 1/4 Pt. required	
Daily	7, 8, 9, 10, 11, 12 & 13	Miscellaneous Carriage and Taper Attachment Bearing	Oil with a Squirt Can	
Weekly	2 (Now lubricated for life)	Pulley Bearing	Apply two or three shots with Grease Gun	Good quality Ball and Roller Bearing Grease of permanent composition. Viscosity: 60-100 Sec. Saybolt at 210° F. A06B
Weekly	14-A (14", 16", 20" Std.) 14 [illegible]d larger [illegible]aker and [illegible]hes)	Cross Feed Screw and Nuts	Apply two or three shots with Grease Gun	
	[illegible] Center)	Screw Threads and Ball Bearings for Center	Apply grease with Grease Gun until old grease is forced out around center.	

JRG 1-8-57

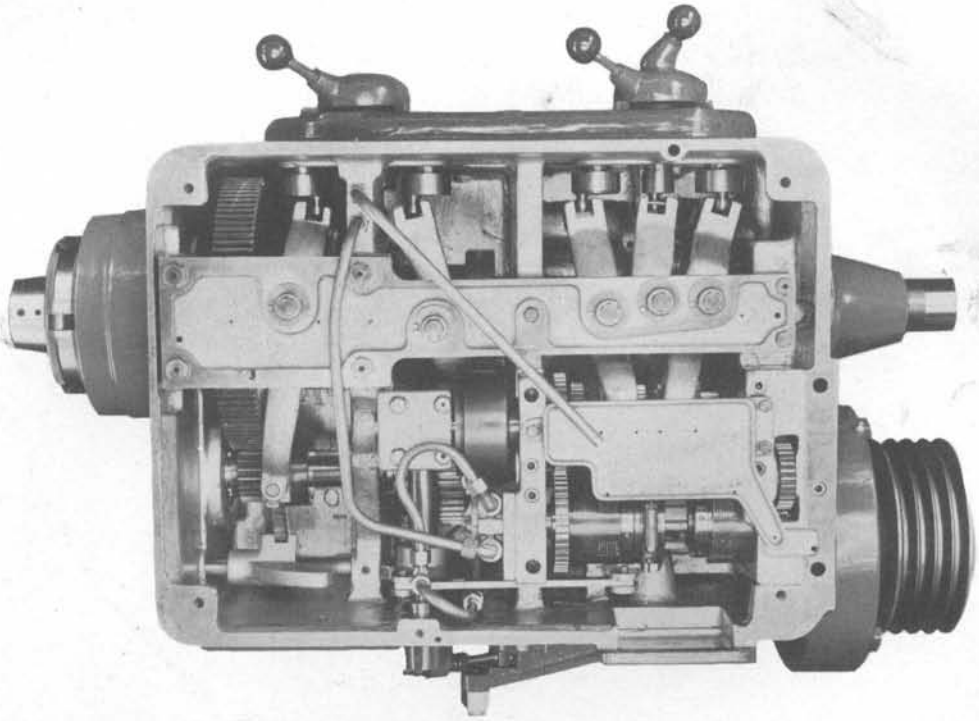

Figure 4 - Model X - 14" 16" H.D. and 20" Std. Headstock with Cover Removed

Oil should always be seen splashing against the detector window at the front of the headstock whenever the motor is driving the pulley. If no flow of oil is visible, the pump is not operating and it should be checked immediately. It should be remembered that the pump will not operate if the pulley is being driven in the wrong direction. If all the oil has drained out of the pump it may be necessary to prime it first to get started. Check the lubrication chart on pages 6 and 7 for the location of the priming plug or cup to use for pouring oil into the pump.

The oil in the headstock reservoir should be drained occasionally and replaced with clean, fresh oil. The frequency depends upon how much the lathe is being used, but good average recommendations are included in the lubrication chart.

It should be carefully noted that two oil level windows, a low level and a high level, are provided at the rear of the headstock oil reservoir of the 14" and 16" Heavy Duty and the 20" Standard Lathes. When the headstock is initially filled with oil, it should be filled up to the high level and then operated for a short period until the pump has had a chance to circulate the oil through the entire system. The headstock should then be stopped and the oil given a chance to drain back into the reservoir as much as it will. Some of the oil will remain

in the headstock itself, particularly in the lower recess housing the feed drive gears. More oil should then be added until the high level is once again reached. Whenever the headstock is stopped afterward, the high level will be maintained. The low level window simply indicates the level at which the reservoir should immediately be refilled.

Only one oil level window is provided for the headstock of the 20" Heavy Duty Lathes and larger and the 25"Standard and Heavy Duty Oil Country Lathes and it is located at the front of the headstock under the detector window. The level determined by the initial filling will be very nearly maintained whenever the headstock is stopped. More oil, of course, should be added as required.

All of the aprons and carriages are also provided with automatic lubrication. A plunger type pump is mounted in the apron and automatically operated by either the longitudinal or cross feed. It supplies oil from the apron reservoir to the gears and bearings in the apron, to the bedways, and to the compound rest bottom slide. The pump may be operated by hand to supply oil to the bedways before moving the carriage, by means of the manual pump lever directly below the clutch levers on the front of the apron. Shear wipers are provided at each end of the carriage bearings. The shear wipers should be removed, cleaned and replaced periodically. In replacing them, care should be exercised to be sure they are bearing on the bedway for their full width.

The tailstock bases of all sizes of Model X Lathes include oil reservoirs and wicking to automatically lubricate the bedways. Shear wipers are also provided for the ways at each end of the tailstock to clean the ways as the tailstock is moved along the bed. These shear wipers should also be removed, cleaned and replaced periodically.

The totally enclosed quick change gear boxes are automatically lubricated by a plunger type pump at the bottom of the box. The pump is operated by a cam which is driven whenever the feed gears are revolving. Oil should be seen splashing against the detector window on the right end of the quick change gear box whenever the thread and feed mechanism is being used. If no flow is visible the pump should be checked immediately. On very fine feeds, however, the flow may not be quite enough to touch the window. The oil is pumped from the reservoir at the bottom of the box to a distributing system at the top of the box. There it is distributed to the quick change gears and bearings as well as to the end gearing bearings and leadscrew and feed rod forward bearings. As indicated on the lubrication chart, the large cup at the top of the end gearing cove is used to supply oil to the wicking which lubricates the quadrant end gears.

TIPS TO INSURE ACCURATE WORK

If difficulty is experienced in maintaining turning, facing and boring operations to within standard limits, the chances are this is caused by the lathe being out of level. Experience gained in hundreds of cases on complaints of this nature enables us to make this statement authoritatively. The first thing to do is to relevel the lathe carefully using a good sensitive machinists' level.

For work held between centers, it is important to make sure that the centers in the work line up with each other. Remember that if a long piece is turned without a steady rest or follow rest, the work itself will spring away from the tool to some extent.

While misalignment may have been caused by rough handling in shipment, these cases are so extremely rare that all other possibilities should be exhausted first before requesting a factory service call. If the lathe chatters, it may be due to one or more of the following causes:

(1) Machine may not be level; see bulletin entitled "Preparing Lodge & Shipley Lathes for Action".

(2) One or more of the leveling screws may not be resting solidly on leveling plates; carefully readjust.

(3) Work may not be well enough supported by extending too far out from chuck; chuck the work shorter or support outer end in a steady rest.

(4) Work supported between centers may be too long in relation to the diameter; use a steady rest near the middle of the piece when the length is more than about 12 times the diameter.

(5) Oil, grease, or dirt may be between the bore of the driver and the spindle nose; carefully clean and dry both the bore and the nose.

(6) Nicks may be in the bore of the driver or on the spindle nose; carefully polish smooth.

(7) The keyway of the driver may be bearing on the top of the key in the spindle nose; file the keyway for clearance - do not alter the key in the spindle nose.

NOTE: If chucks or other drivers tend to loosen on the nose during operation, points #5, #6, or #7 will undoubtedly be the cause.

(8) The adapter plate, if used, may be loose against the driver or improperly fit to the spindle nose; alter as required.

(9) There may be end play in the spindle; see instructions on page15 for adjusting spindle bearings.

(10) The cross-slide or top slide gibs may be too loose; readjust carefully - see page 22.

(11) Cutting edge of tool may be below center line; readjust to bring it on center to 1/32" above center.

(12) Dirt may have collected between the centers and the workpiece, the tailstock center and spindle bore, the headstock center and collet, or the collet and bore; carefully clean all surfaces.

(13) Cutting tool may be too weak or may be overhanging the block too far.

(14) Cutting tool may be loose in the block.

(15) If using a tool holder with an inserted bit, the bit may be loose.

(16) If using an unbalanced driving fixture or machining an unbalanced workpiece, the machine may vibrate; counterbalance with weights on the light side of the spindle.

(17) The cutting speeds and feeds may be incorrect; get proper recommendations and reset machine.

(18) Foundation may not be rigid enough to isolate vibration from adjacent machines.

HEADSTOCK

Figure 4 shows the top view of Model X 16" Heavy Duty Lathe headstock with the cover removed. Except for the notable differences mentioned below, it may be considered typical of the Lathes. Note that 24 forward speeds and 16 reverse speeds are obtained by shifting spur gears along hardened splined shafts by three levers at the front of the headstock. In order to change the speeds, the levers are moved to the locations indicated on the index plate for the desired speed.

NOTE: Do not shift the gears before stopping the spindle.

If the levers do not move readily to engage the selected speed, engage the friction clutch slightly to move the gears a small amount. A neutral position (lettered "N") is included in order to make it possible to rotate the spindle by hand for adjusting chuck jaws, etc.

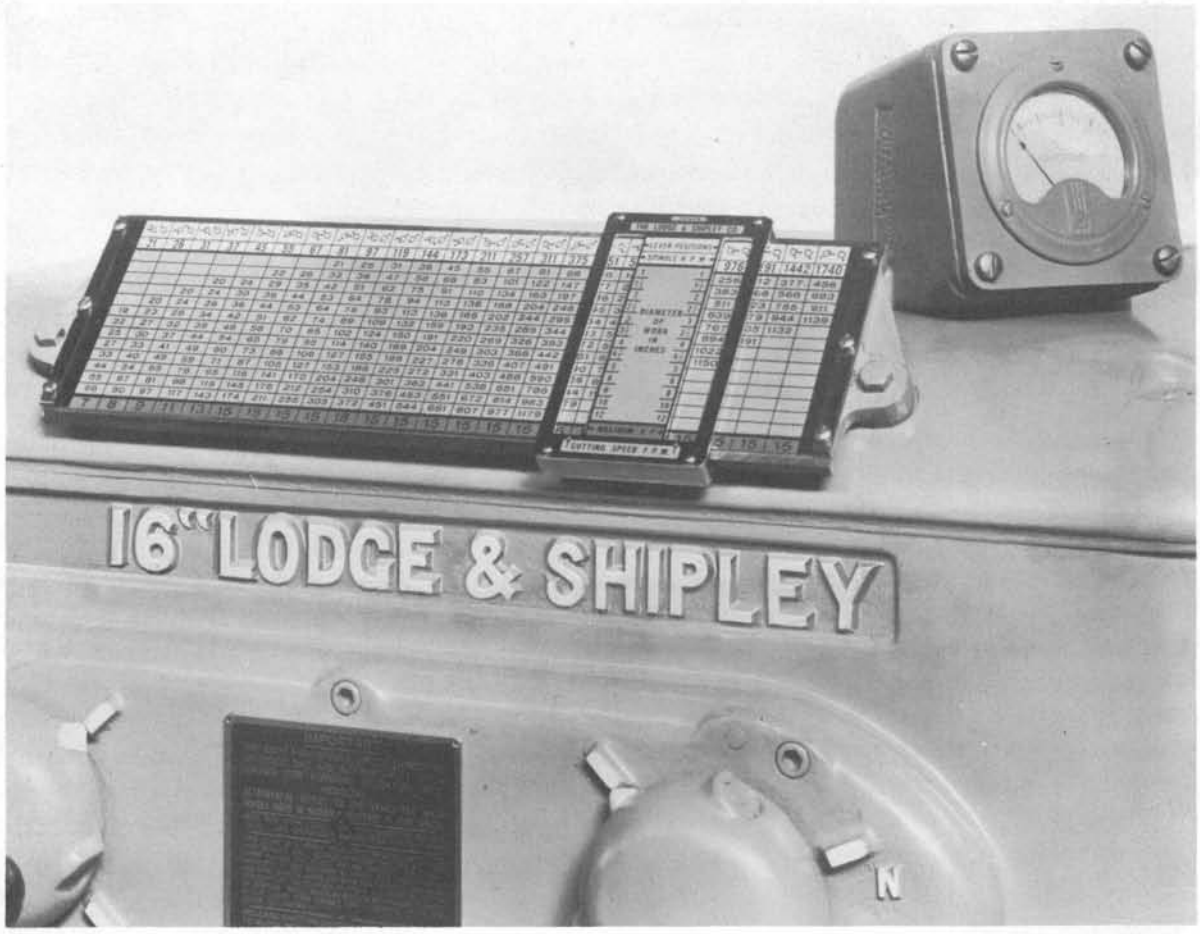

Figure 5 - Maximum Horsepower and Cut Speed Indicator with Ammeter

The standard Slide Rule Type Spindle Speed Index Plate and Maximum Horsepower and Cut Speed Indicator along with an Ammeter calibrated in horsepower (optional at additional cost) are shown in Figure 5. The standard speed range for the 14" Heavy Duty Model X Lathe is 14 to 1160 R.P.M. with a maximum allowable horsepower of 10. That range and power is also the same for the 16" Heavy Duty and the 20" Standard machines and all three sizes also have optional intermediate ranges of 21 to 1740 R.P.M. with a maximum of 15 horsepower and high ranges of 24 to 2000 R.P.M. with a maximum of 20 horsepower. The standard speed range for the 20" Heavy Duty and the 25" Standard machines is 9 to 500 R.P.M. with a maximum of 20 horsepower and the high range is 13 1/2 to 750 R.P.M. with a maximum of 30 horsepower. The standard speed range for the 25" Heavy Duty and the 32" Standard Lathes is 7 1/2 to 422 R.P.M. with a maximum of 25 horsepower and the high range is 9 to 507 R.P.M. with a maximum of 30 horsepower. A low speed range from 6 to 338 R.P.M. with a maximum of 20 horsepower can also be supplied. The standard speed range for the 25" Standard Oil Country Lathe is 8 to 451 R.P.M. with a maximum of 20 horsepower and the low speed range is 6 to 338 R.P.M. with a maximum of 15 horsepower. The standard speed range for the 25" Heavy Duty Oil Country Lathe is 6 to 338 R.P.M. with a maximum of 20 horsepower.

In every speed range of sizes 14", 16", 20" HD, 20" and 25" Standard Model X Lathes, the highest eight spindle speeds are interlocked to prevent reversing of the spindle. Note from Figure 4 that whenever the high speed spindle gear is being driven, the interlock hook is in position to prevent the reverse clutch from being engaged. Reversing at the high speeds without allowing the spindle to stop completely would be detrimental to the gearing. On Lathe sizes 25" Heavy Duty and larger, an electrical reverse to the motor is furnished when ordered. A centrifugal interlock (zero switch) is provided on these lathes to prevent reversing the motor until motor RPM is approximately 50. When reversing is ordered on these lathes, the same range of spindle speeds available in the forward direction is also available in reverse.

The five shifter levers which pivot from the oil distributor trough are accurately set at the factory for full engagement of the gears. If however, for any reason, it becomes necessary to reposition the travel of the gears for proper meshing, eccentric bushings are provided at the pivots for making such an adjustment. It is then necessary to remove the pins, rotate the bushings for a suitable adjustment and repin.

The Cut Speed Indicator should be used by moving the slider until the largest diameter (inches; if metric-millimeters) of the workpiece to be machined (set up in either the right or left column) is in index with the suitable surface speed (ft./min.; if metric, meters/min.) to be used for the job. At that point the proper R.P.M. and lever setting will appear at the top of the slot being used in the slider and the maximum allowable horsepower for that R.P.M. will appear at the bottom. The horsepower shown simply indicates the maximum safe horsepower cut that can be taken at that particular spindle speed. An Ammeter, when used in conjunction with the Cut Speed Indicator, shows the horsepower consumed at any given time or condition of cut. The machine, therefore, should never be operated in such a manner that the Ammeter shows a higher horsepower than the Cut Speed Indicator for that particular spindle speed. On the other hand, in order to protect the motor, the machine should never be operated over a prolonged period with the Ammeter showing a higher horsepower than the rated power of the motor. If desired, the approximate horsepower that will be consumed by any cut may be calculated in advance by the usual formula.

The feeds are driven from the spindle gear inside the headstock near the rear end of the spindle and then, although not completely visible in Figure 4, through a double-ended positive reversing clutch to a gear on the outside of the head which drives the end gearing to the quick-change gear box. The clutch is of the multiple-tooth type for all machines except toolmaker lathes, and is controlled by the thread direction lever at the front of the head stock. For toolmaker lathes, the clutch is of the single-tooth type, since for threading, register between the spindle and leadscrew must be maintained. The clutch is then operated through the mechanical reverse to leadscrew linkage from the apron. The 25" Heavy Duty and the 32" Standard Lathes reverse by shifting a gear instead of a clutch.

HEADSTOCK SPINDLE

The Key Drive Tapered Spindle Nose is standard on all sizes of Model X Lathes (except the Oil Country Lathes). Face plates, chucks, and other types of driving fixtures are made for direct application. When placing chucks or other drivers on the nose, the bore and nose should be thoroughly cleaned and wiped to remove any oil or grease and then the spindle should be rotated to bring the key to the top. This key is designed to support the fixtures and align them with the threaded lock ring.

The Cam Lock Spindle Nose will be furnished optionally at no additional cost instead of the Key Drive Tapered Spindle Nose on all sizes of Model X Lathes from the 14" Heavy Duty through the 25" Standard.

The spindle of the 25" Standard Oil Country Lathe employs the American Standard 15" A-1 spindle nose, while that of the 25" Heavy Duty Oil Country Lathe employs the American Standard 20" A-1 spindle nose. When changing chucks or face plates on the Oil Country Lathes, the bore and nose should be carefully cleaned and wiped to remove any oil or grease and the spindle rotated to bring the driving pin to the proper position to enter the chuck. The chuck should then be bolted tightly against the flange of the nose.

The spindles of the 14" and 16" Heavy Duty and 20" Standard Lathes are supported at the front and center on two opposed tapered roller bearings and at the rear by a double row tapered roller bearing with a floating outer race, as shown in Figure 6. Figure 7 shows the spindle assembly for the 20" Heavy Duty and larger Engine and Toolmaker Lathes in which the rear bearing is the same type as for the smaller sizes to allow free expansion of the spindle and the forward bearings are also two opposed tapered roller bearings but are set closer together than are those in the smaller sizes. Figure 8 shows the spindle assembly for the Large Hole in Spindle Oil Country Lathes.

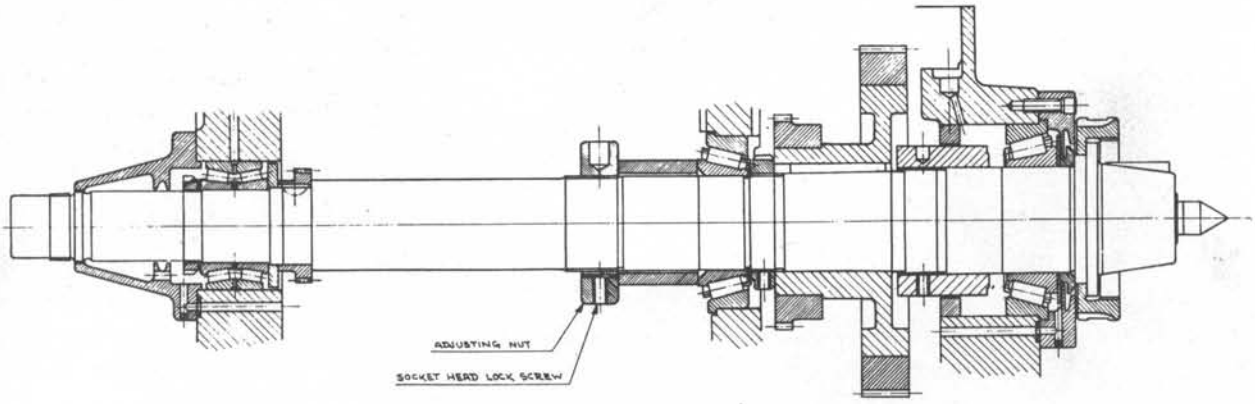

Figure 6 - Spindle Mounting on Model X - 14", 16" H.D. and 20" Standard.

The spindle bearings are carefully adjusted before the lathe is shipped from the factory and unless absolutely necessary this adjustment should not be changed.

To adjust the bearings on the 14" and 16" Heavy Duty and the 20" Standard Lathes, proceed as follows:

Remove the main cover over the top of the headstock and rotate the spindle by hand until the socket head set screw which locks the adjusting nut can be loosened. The screw will be slightly peened over to prevent backing out, but can be broken loose with a good wrench. After releasing the lock screw, tighten the adjusting nut until the front and center tapered roller bearings are free of all end play and when the spindle is turned by hand, there is a very slight drag. Rotate the spindle in alternate directions while tightening the adjusting nut to assure the proper seating of the bearing rolls. Relock the set screw tightly and repeen it; replace the cover; and run the headstock slowly at first and then faster, until the highest speed is reached. Operate at that speed for about an hour. During that period, check the temperature of the bearings several times to see that it does not exceed about 140°F., and also make certain the bearings are not noisy. The rear bearing is set at the factory and will need no further adjusting in the field.

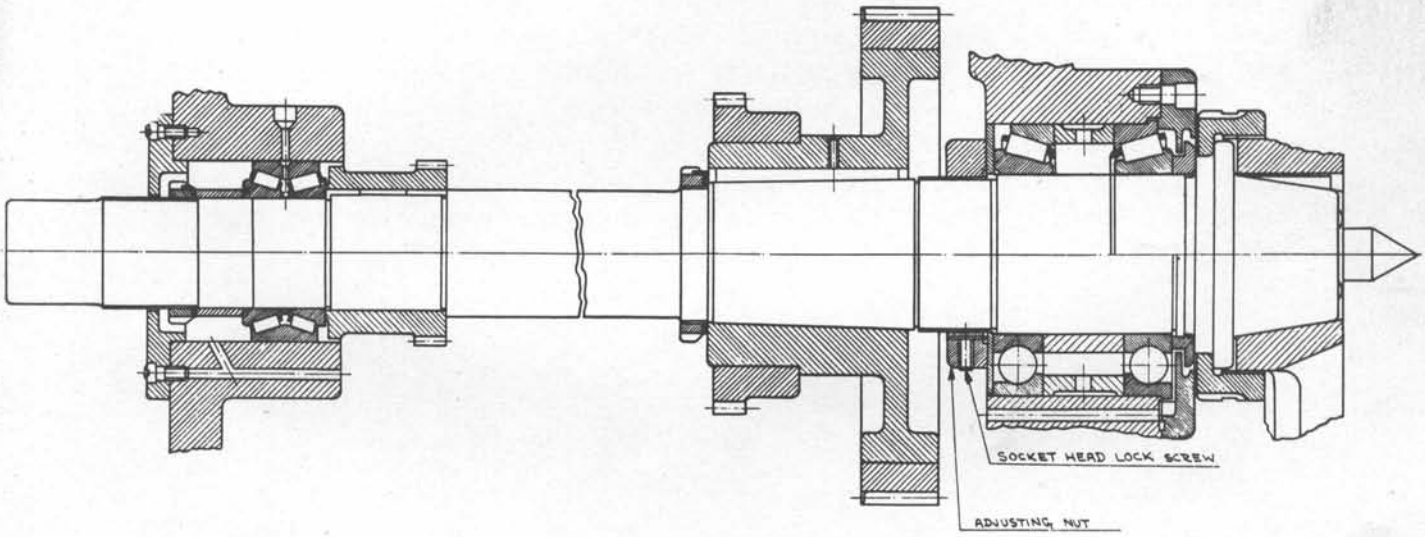

Figure 7 - Spindle Mounting on Model X - 20" H.D. and Larger Engine and Toolmakers Lathes

To adjust the bearings on the 20" Heavy Duty and larger Engine and Toolmaker Lathes proceed as follows:

Remove the main cover over the top of the headstock and rotate the spindle by hand until the socket head set screw which locks the adjusting nut can be loosened. The screw will be slightly peened over to prevent backing out, but can be broken loose with a good wrench. After releasing the lock screw, tighten the adjusting nut until the two front tapered roller bearings are free of all end play and, when the spindle is turned by hand, there is a very slight drag. Rotate the spindle in alternate directions while tightening the adjusting nut to assure the proper seating of the bearing rolls. Relock the set screw tightly and repeen it; replace the cover; and run the headstock slowly at first and then faster, until the highest speed is reached. Operate at that speed for about an hour. During that period, check the temperature of the bearings several times to see that it does not exceed about 140° F., and also make certain the bearings are not noisy. The rear bearing is set at the factory and will need no further adjusting in the field.

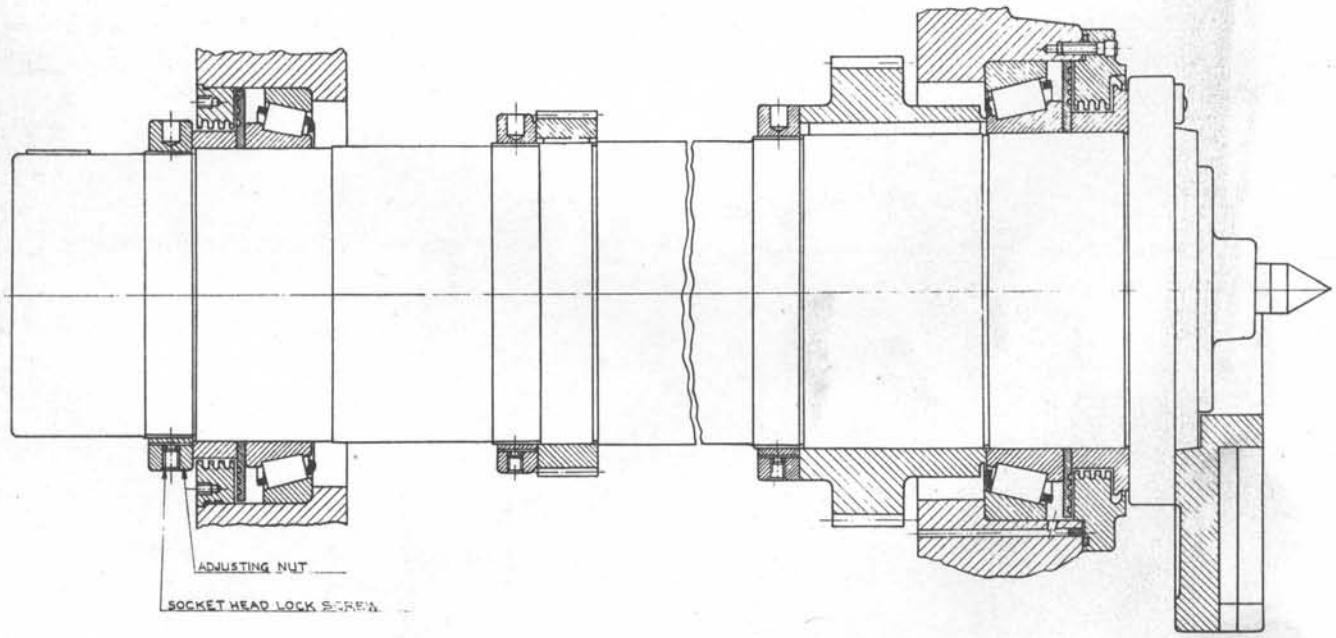

Figure 8 - Spindle Mounting on Model X Oil Country Lathes

To adjust the bearings on the Large Hole in Spindle Oil Country Lathes, proceed as follows:

Rotate the spindle by hand until the socket head set screw which locks the adjusting nut at the rear of the spindle can be loosened. The screw will be slightly peened over to prevent backing out, but can be broken loose with a good wrench. After releasing the lock screw, tighten the adjusting nut until the bearings are free of all end play and, when the spindle is turned by hand, there is a very slight drag. Rotate the spindle in alternate directions while tightening the adjusting nut to assure the proper seating of the bearing rolls. The amount of drag should be checked by inserting two long bolts in diametrically opposite holes in the flange of the spindle nose and rotating the spindle by hand with the two bolts. The proper adjustment is to have the bearings tight enough to allow the spindle to turn for about 1 1/2 revolutions. Relock the set screw tightly, repeen it, and run the headstock slowly at first and then faster, until the highest speed is reached. Operate at that speed for about an hour. During that period, check the temperature of the bearings several times to see that it does not exceed about 140° F., and also make certain the bearings are not noisy.

HEADSTOCK CLUTCHES AND BRAKE-14", 16", 20" Heavy Duty, 20" and 25" Standard

A forward and reverse multiple disc clutch is an integral part of the headstock of the 14", 16", 20" Heavy Duty, 20" and 25" Standard, Model X Lathes and is located on the initial drive shaft as seen in Figure 4. They are interconnected with an efficient cone-type brake which is also built into the headstock and provides braking to the spindle from the forward as well as the reverse spindle rotation.

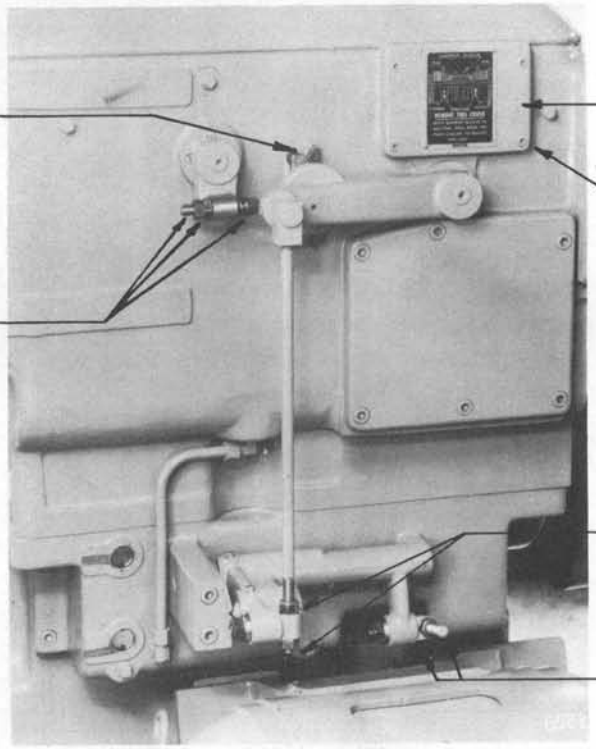

Figure 9 - Rear View of Headstock on Model X -14", 16" H.D., and 20" Standard

The square shaft running along the front of the bed controls the movements of the clutches and brake, and levers at the headstock end and also attached to the apron are used by the operator for rotating the square shaft. The spindle is started turning forward by pulling either lever up as far as it will move; it is stopped by moving it down to the central position. At that point, the forward clutch is disengaged and the brake is applied. An interlocking trip mechanism, which may be seen in Figure 9, at the rear of the headstock prevents moving either starting lever down through the central position from forward into reverse without hesitating in the brake position. This feature eliminates changing rapidly from forward to reverse without application of the brake. To change from forward into reverse, either lever is moved down into the brake position, then lifted slightly to disengage the interlock and then moved downward into the reverse position. To stop, either lever is moved up again to the central brake position.

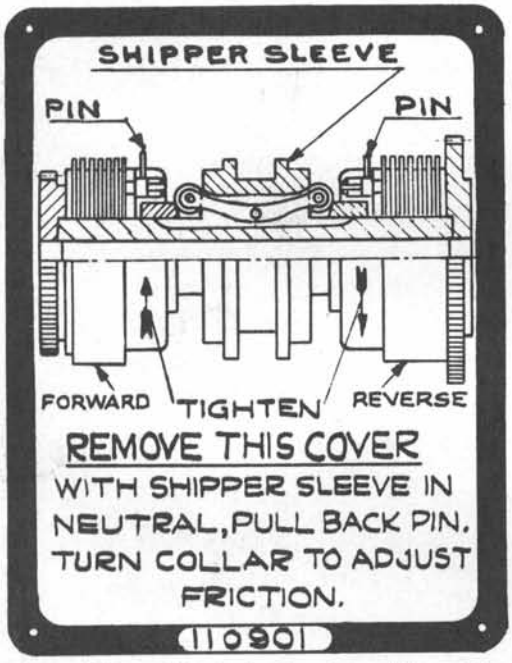

Figure 10 - Clutch Instruction Plate

If either the forward or reverse clutch does not pull, heats, or jumps out of engagement, it must be adjusted. To adjust, remove the small cover on which is mounted the instruction plate shown in Fig. 10. With the clutch in neutral, turn it until the adjusting lock pin can be reached. Pull the pin out and turn the adjusting ring as shown in Figure 10 one or two adjusting holes, or until the operating lever requires a distinct pressure to engage. Before starting the lathe, be sure the pin is properly engaged and seated. A new clutch may require several adjustments when first put into operation in order to wear in the plates and action parts. After the initial adjustments, clutches will run for a considerable period without adjustment.

The cone type brake, which is lined with molded Raybestos, may be adjusted with the locknuts on the brake linkage shown in Figure 9. To increase the braking effect, draw the nut up against the spring when the linkage is in the brake position. The releasing of the brake is adjusted by the nut and locknut opposite the spring. Move the linkage to the brake position and adjust these nuts so that there will be a clearance of .010 to .015 from the square pivot. The brake should always be adjusted to bring the spindle to a slow stop.

The up and down positions of the forward and reverse starting levers may be adjusted by lengthening or shortening the effective length of the horizontal front-to-rear link shown in Figure 9. Changing the length can be accomplished by adjusting the nuts at the back end of the link as required.

HEADSTOCK BRAKE AND REVERSE - 25" Heavy Duty and 32" Standard

The 25" Heavy Duty and 32" Standard Lathes are supplied with an electro magnetic brake and, when ordered, with electrical reversing controls for the main drive motor.

The braking of the spindle is accomplished by an electrically-operated magnetic brake, mounted between the pulley sheave and the frame of the headstock. This efficient magnetic brake provides braking to the spindle from forward, as well as the reverse spindle rotation.

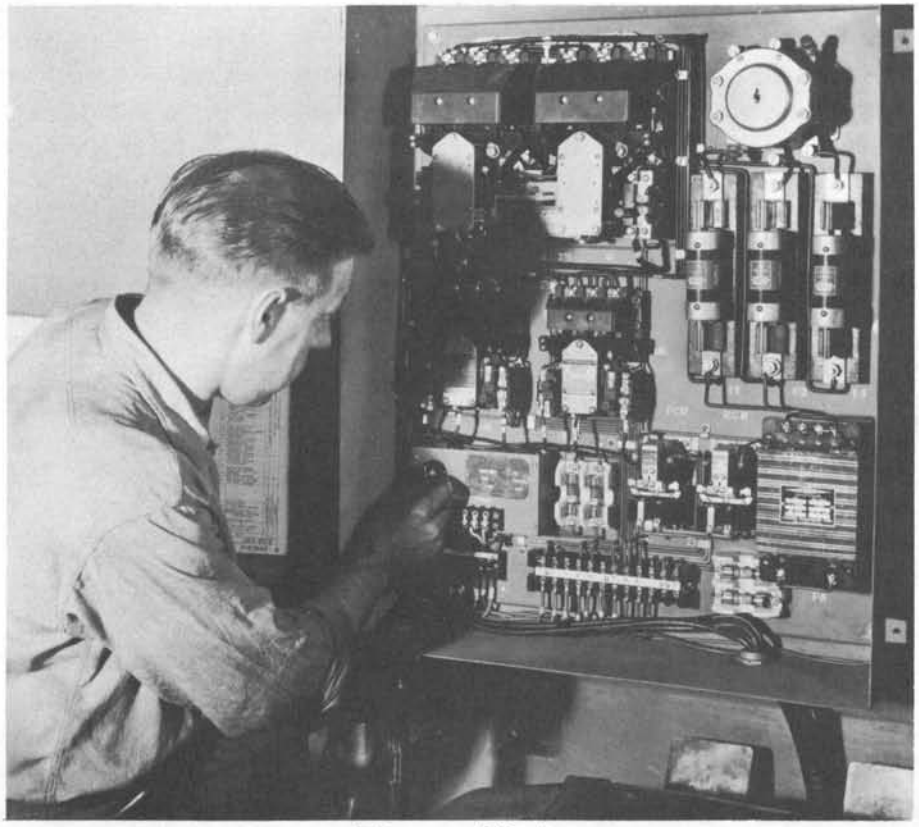

Figure 10-A

The amount of braking torque may be quickly regulated, when necessary, by the small rheostat shown in Figure 10-A. EXTREME CAUTION should be exercised in adjusting this rheostat as serious damage to the headstock gearing can result from stopping this spindle too quickly.

Definite rules for adjusting brake torque in the field cannot be given because operating conditions vary with the type of work driver being used, the size and weight of the work piece and the spindle R.P.M. A "Rule of the Thumb" that might be followed in adjusting the brake torque is: First, operate the spindle at one half of its highest R.P.M. Second, assuming that a chuck is used for a work driver, adjust the rheostat to bring the spindle to a stop in seven or eight seconds. Under no circumstances should a stopping time of less than six seconds be used.

The master switch control bar is the square shaft running along the front of the bed. The starting lever on the right side of the apron controls the rotation of the square shaft and thus is used by the operator to control the master switch. The spindle is started turning forward, or

counter clockwise, by pulling the starting lever up as far as it will move. It is stopped by moving it down to the central position. At that point the master switch controlling the forward rotation of the spindle is disengaged and the magnetic brake is applied. To change from forward into reverse, when the machine is so equipped, the starting lever is moved down from the forward position through the central brake position and into the reverse position. To stop, the lever is moved up again to the central brake position.

If the lathe is equipped with reverse spindle speeds, it is also equipped with a zero switch. When the starting lever is moved from the forward position to the reverse position, the zero switch prevents the instantaneous reversal of the direction of the motor. It causes the magnetic brake to stay engaged until the motor has reduced its speed to approximately 50 R.P.M., at which time the contactors for the reverse speed are engaged. This safety feature eliminates any detrimental effect to the headstock or motor by reversing too quickly.

The basic control for setting up the various electrical units of the 25" Heavy Duty and 32" Standard, is centralized in the terminal box on the rear of the headstock. A push button station is conveniently located on top of the headstock. The station includes a start button, a stop button, a red pilot light, and a jog button. When auxiliary equipment is supplied with the machine, additional stations are furnished as required.

The start button energizes the control panel as indicated by the red pilot light. Energizing the panel causes the magnetic brake to be set, provided the starting lever is in neutral and the jog button collar set to "run" and causes the rapid traverse motor to start. When the starting lever is set in the central position, pushing the jog button causes the spindle to move around just a small amount. If the collar around the jog button is set to "jog", the spindle will move around and come to a stop without the brake being applied. When the collar is set to "run", pushing the jog button causes the spindle to move around a small amount and then immediately be braked when the jog button is released. While the collar is set to "jog", the starting lever has no control over the spindle.

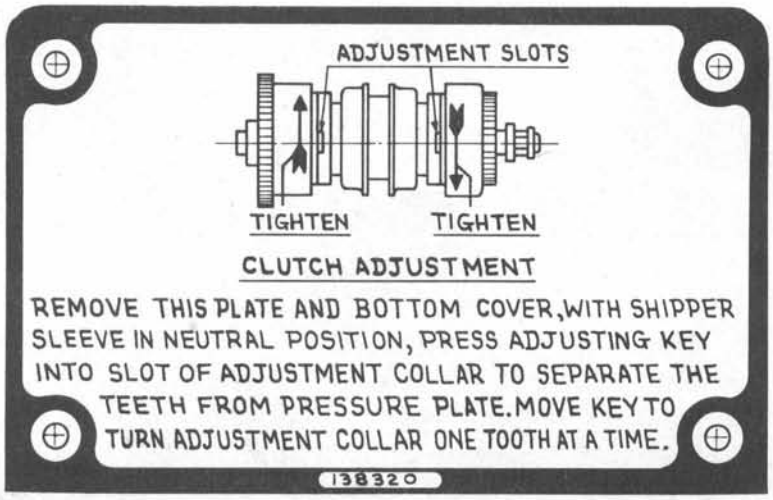

Figure 10-B

POWER RAPID TRAVERSE

The power rapid traverse, standard on the 25" Heavy Duty, 32" Standard and the 25" Heavy Duty 11 1/2" Hollow Spindle Oil Country Lathes, can be supplied on other lathes at extra cost. It is driven by a separate motor which is arranged to run whenever the control panel is energized by pushing the start button on the terminal box. Power is supplied by a gear motor through a right and left hand screw on which are mounted right and left hand nuts. These nuts are carried on the housing attached to the rear of the carriage. By restraining either the right or left hand nut through a multiple disc clutch operated by a lever on the front of the carriage, right or left hand traverse is accomplished.

Adjustment of the power rapid traverse is made by removing the clutch adjustment instruction plate (see Figure 10-B) and the bottom cover of the traverse clutch housing. With the Shipper Sleeve in neutral position, press the adjusting key into a slot of the adjustment collar in order to separate the teeth from the pressure plate. Now move the key to turn the adjustment collar one tooth at a time.

CARRIAGE, COMPOUND REST AND APRON

The carriages of all of the Model X Lathes have both manual and power feeds, as do the cross slides. The compound rest top slide is equipped with hand feed only and may be swiveled on its graduated base to any angle through 360° . Four bolts in the swivel lock the compound rest to the desired angle. Hand traverse of the carriage is operated by the large handwheel on the front of the apron, while hand feed to the cross slide is operated by the ball crank on the cross feed screw and hand feed to the top slide by the ball crank on the top slide screw.

Two levers are conveniently located at the front of the apron for engaging the power feeds. When raised, the left lever engages the cone friction type clutch for feeding the carriage longitudinally, while the right lever engages the feed to the cross slide in a similar manner. Either feed can be disengaged by pushing the lever down all the way. The lever below and to the right of the clutch levers controls the direction of the power feeds and may be placed in forward, neutral, or reverse positions. Note that it affects the direction of rotation of the feed train within the apron and thus reverses both the longitudinal and cross feeds. The lever to the right at the top of the apron engages the half nuts with the leadscrew. An interlock prevents engaging the half nuts without having the feed reverse lever in neutral. When it is in neutral it is impossible to engage the cross or longitudinal feed in either direction.

The standard dials for both the cross slide and top slide are calibrated to indicate .001" (.025 mm., if metric) movement of the slide for each graduation on the dial. When the cross slide dial is used for setting a diameter, therefore, it should be noted that .002" (.050 mm., if metric) will be removed from the diameter for each line passed on the dial.

The micrometer ball stop is provided as a standard feature whenever a standard dial or direct-reading diameter attachment is used, but is omitted when the machine is supplied with multiple diameter stops. It simplifies threading operations by providing an adjustable depth stop on the cross feed screw. It can also be used to advantage as a single diameter stop for turning duplicate diameters.

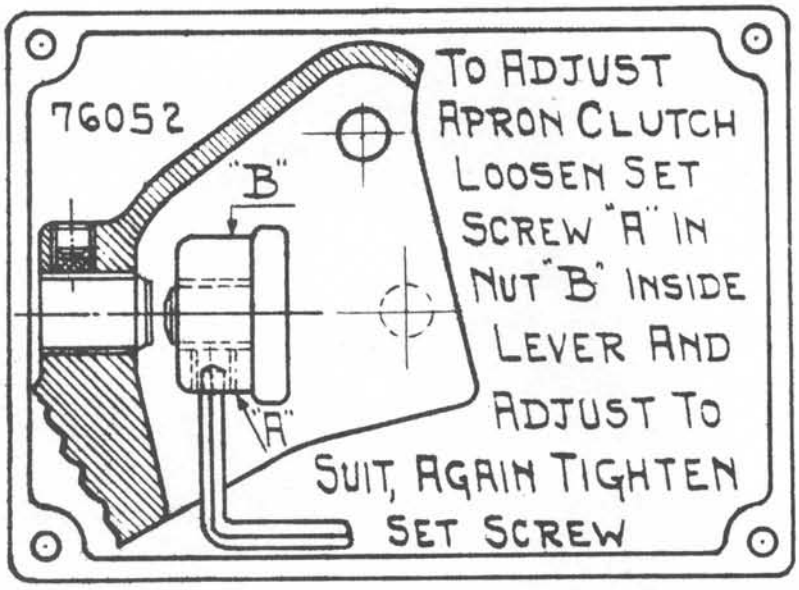

Figure 11 - Feed Clutch Instruction Plate

The ball stop consists simply of a micrometer sleeve which fits in the bore of the front dial bracket, and may either rotate freely when the thumb screw is loose, or be bound to the bracket when the thumb screw is tightened up. The thumb screw exerts pressure through a copper plug and, therefore, may hold the sleeve tightly under high pressure or may allow it to slip somewhat under lower pressure. A steel ball is confined to travel in a straight groove on the inside of the sleeve and in a spiral groove of three turns on the outer diameter of a micrometer bush keyed to the ball crank.

When chasing threads by feeding the tool in on an angle with the top slide, the thumb screw is tightened snugly to form a positive inward stop for the cross slide with the chasing tool set at the thread diameter. The top slide dial is set at zero at that point, and the tool is then advanced inward after each pass with the top slide. The depth is thus easily recorded on the top slide dial. When chasing threads by feeding the tool straight into the work, the above method can be used or the thumb screw can be tightened lightly after the tool is set at the thread diameter and the cross feed dial set at zero. For successive cuts, the stop can be slipped to advance the tool while the dial records the depth. In either case, the ball stop makes it possible to return the tool accurately to the bottom of the last cut by running against the stop. The stop works equally well moving inward or outward, for external or internal work.

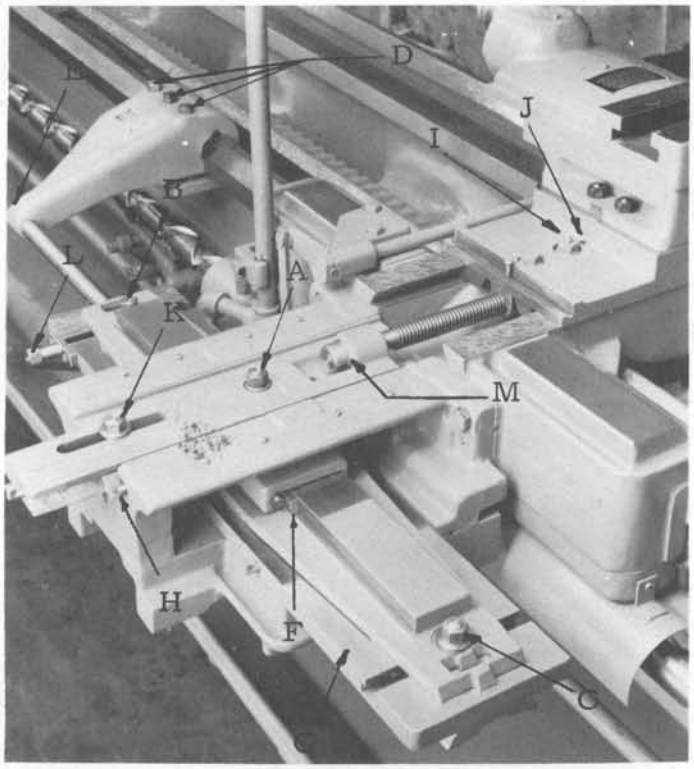

Figure 12 - Carriage and Taper Attachment

The feed clutch levers are initially adjusted at the factory and should normally need little further adjustment in the field. An adjustment may be required, however, after the first few hours of operation. If so, raise the lever to the engaged position and loosen hollow-head set screw "A" in nut "B" inside the lever as shown in Figure 11. Turn nut "B" clockwise to engage the cone more deeply or vice versa and then retighten set screw "A". The adjustment should be made tight enough so that, after the lever is pulled up, it will hold the clutch snugly in engagement.

Carriage gibs are provided for the hold downs on both the front and the back of the carriage on all sizes of lathes. The carriage takes it bearing on the front and rear Vee type bedways of hardened and ground steel. Under extremely heavy cuts, bearing is also taken on the flat tailstock way. The gibs are made in two pieces, each half entering between the carriage and bedway from the ends of the carriage. Each half is adjusted separately by tightening the screw at the outer end of the gib after one or more shims have been removed from the set of shims under the screw head. Removing one shim 1/16" thick tightens the adjustment by .001". The shim arrangement makes it possible to make the proper adjustment and to automatically record that setting. On the 20" Heavy Duty, and larger lathes, an additional clamp and gib is provided under the center flat tailstock way.

In case any backlash develops between the cross feed screw and the nut and compensating nut, it may be eliminated by loosening screw "I" slightly, then tightening screw "J" and retightening screw "I" as shown in Figure 12. By tightening screw "J", the nut and compensating nut are mov-

ed closer together to take up the backlash on the threads. End play in the cross feed screw or any looseness in the ball thrust bearings at the rear of the screw may be taken up by loosening the hollow-head set screw in nut "M", tightening the nut and relocking it with the set screw.

TAPER ATTACHMENT

The taper attachment for all of the Model X Lathes is an extra item and furnished only when ordered. It is a self-contained unit bolted to the back of the carriage and traveling with it. All carriages, however, are machined and jig-drilled for application of the attachment so that it can be ordered at a later date and easily installed.

To set the attachment for any desired taper, loosen nut "A", which holds the guide plate to the sliding shoe, as well as nuts "B" and "C" at the ends of the swivel bar and screw "K" shown in Figure 12. Set the swivel bar to the desired taper, as determined by the scale, with adjusting screw "L", and retighten nuts "A", "B", and "C". These nuts should always be tight except when setting the taper. The standard taper scale is graduated in inches per foot (mm., per 100 mm., if metric) and degrees of taper, both units being shown on the same scale and indicated by the same pointer.

To engage the taper attachment, loosen the clamp screw "K" and place the clamping arm on the bed in the position shown, fixing the swivel bar to the bed by tightening nuts "E" and "D". When the taper attachment is not in use, clamp screw "K" must be tight, and the clamping arm either completely removed from the bed, or moved far enough away on the bed so that it does not interfere with the movement of the carriage. It is of particular importance that the tool be on the center line when doing taper turning. It is also advisable when the attachment is used consistently on a short job, to shift the swivel bar occasionally to more equally distribute wear.

The cross slide and taper attachment slide should move freely, but there should be no looseness or play. If chatter or non-uniform taper occurs, it is usually the result of looseness and can be corrected by adjusting the cross slide and top slide gibs and gibs "F", "G" and "H" on the taper attachment slides. Too tight an adjustment of the gibs can cause a binding action, which, when taper turning, will cause the slides to jump instead of moving smoothly, and has been known to cause equally divided marks on the workpiece, sometimes incorrectly attributed to gear marks.

TAILSTOCK

The tailstocks for all of the Model X Lathes use a separate rear Vee-type bedway for a guide and a separate front flat bedway for the heavy downward forces, each way being integral with the bed and hand-scraped to a bearing.

The tailstocks for the 14" and 16" Heavy Duty and the 20" Standard machines are of the rear-handwheel type as shown in Figure 1. They are locked in position on the bed by a forward and a rear clamp, the former

operated by two heavy bolts and the latter by a quick-acting lever. Thus, when the tailstock is being moved frequently as in drilling operations, the front clamp may be drawn up to bear lightly underneath the ways and the rear quick-acting clamp can be used for securing the tailstock. A crank arrangement is supplied for moving the tailstock along the bed with ease.

The standard spindle is bored to a #4 Morse taper for the 14" and 16" Heavy Duty and the 20" Standard Lathes to receive dead centers or drill shanks and is supplied with a hardened tang slot at the back end of the taper to prevent drills from slipping under cut. It is possible to remove centers or drills by running the spindle back to the end of the travel and giving the handwheel a little further turn in order that the end of the screw will loosen the center or drill from the tapered hole. A scale of inches in increments of 1/16" (cm. and mm., if metric) is provided on the front side of each standard spindle to measure the amount of spindle travel for drilling, etc. Binder jaws operated by a lever at the back of the nose end lock the spindle in any desired position.

The tailstocks for the 20" Heavy Duty and Larger Engine and Toolmaker Lathes are of the side-handwheel type as shown in Figure 2. They are locked in position on the bed by two heavy clamps, each being actuated by two large bolts. A pawl, operated by a lever at the tail end of the base, engages a rack cast into the center of the bed to back up the clamps and assures definite clamping. A crank arrangement is supplied for moving the tailstock along the bed with ease.

The standard spindle is bored to a #5 Morse taper for the 20" Heavy Duty and the 25" Standard Lathes to receive dead centers or drill shanks and is supplied with a hardened tang slot at the back of the taper to prevent drills from slipping under cut. The #6 Morse taper is used on the larger Engine Lathes. It is possible to remove centers or drills by running the spindle back to the end of the travel and then giving the handwheel a little further turn in order that the end of the screw will loosen the center or drill from the tapered hole. Binder jaws operated by a lever at the front of the nose end lock the spindle in any desired position.

The tailstock for the Oil Country Lathes is the same type of tailstock used on the 20" Heavy Duty and Larger Engine and Toolmaker Lathes except that it has added to it the two-speed drilling arrangement, and counter for measuring the spindle travel in increments of .010" (cm. and mm., if metric) as shown in Figure 3. When the handwheel is pushed completely in and the lever at the top of the handwheel unit is moved to the right, one revolution of the handwheel moves the screw through one revolution. When the handwheel is pulled completely out and the lever is moved to the left, five revolutions of the handwheel moves the screw through one revolution. Thus, in the latter case, the 5:1 reduction makes it possible to feed large drills into solid stock with relative ease. The counter is so geared to the screw that it will indicate the exact travel of the spindle at all times. The winged setting knob on the left end of the counter will

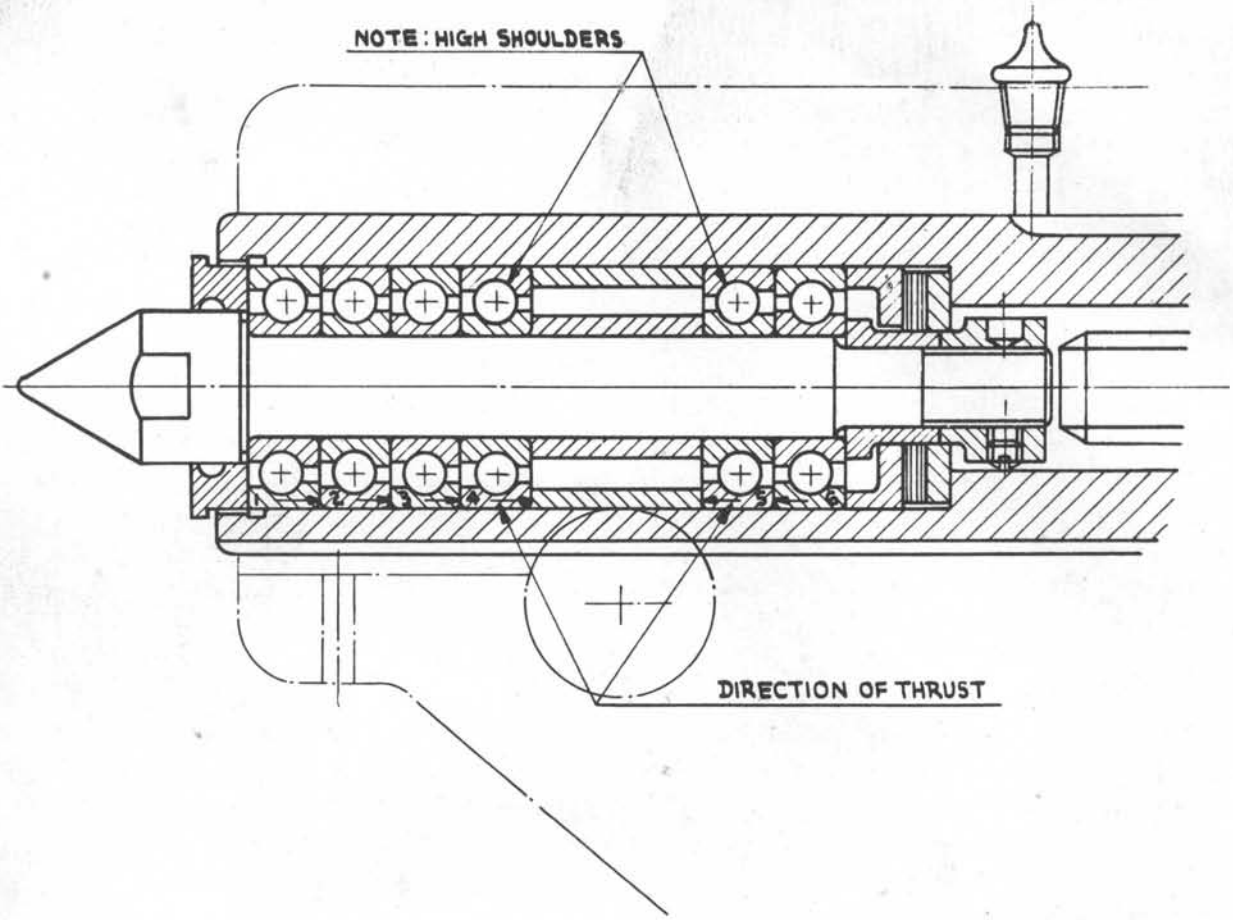

Figure 13 - Tailstock Spindle with Built-In Revolving Center.

move all the figures back to zero to start measuring the travel at any point. The two-speed drilling arrangement and counter may also be obtained at a slight extra charge as an extra item for the 20" Heavy Duty and Larger Engine and Toolmaker Lathes. A two-speed drilling attachment is also available, at extra charge, for the 14", 16" Heavy Duty and 20" Standard Lathes.

Any of the tailstocks can be furnished with a special spindle containing built-in revolving tailstock center, at extra cost, in place of or in addition to the standard spindle. The center in that case is mounted on six radial thrust preloaded ball bearings similar to that shown in Figure 13. If the spindle mounting is disassembled for any reason, it is important that the bearings be reassembled in the original position. Note that the bearings must be mounted so that the high shoulders take up the thrust in the direction shown by the arrows. All of the bearings are etched with the number and arrow for use in reassembling.

All of the tailstock bases are so arranged that it is possible to "set-over" the tailstock top, off of the center line, for doing limited taper turning. Bolts at the front and rear of the base are provided for the adjustment and a scale at the right end is used to measure the "set over".

14" AND 16" HEAVY DUTY AND 20" MEDIUM DUTY ENGINE AND TOOLMAKER LATHES

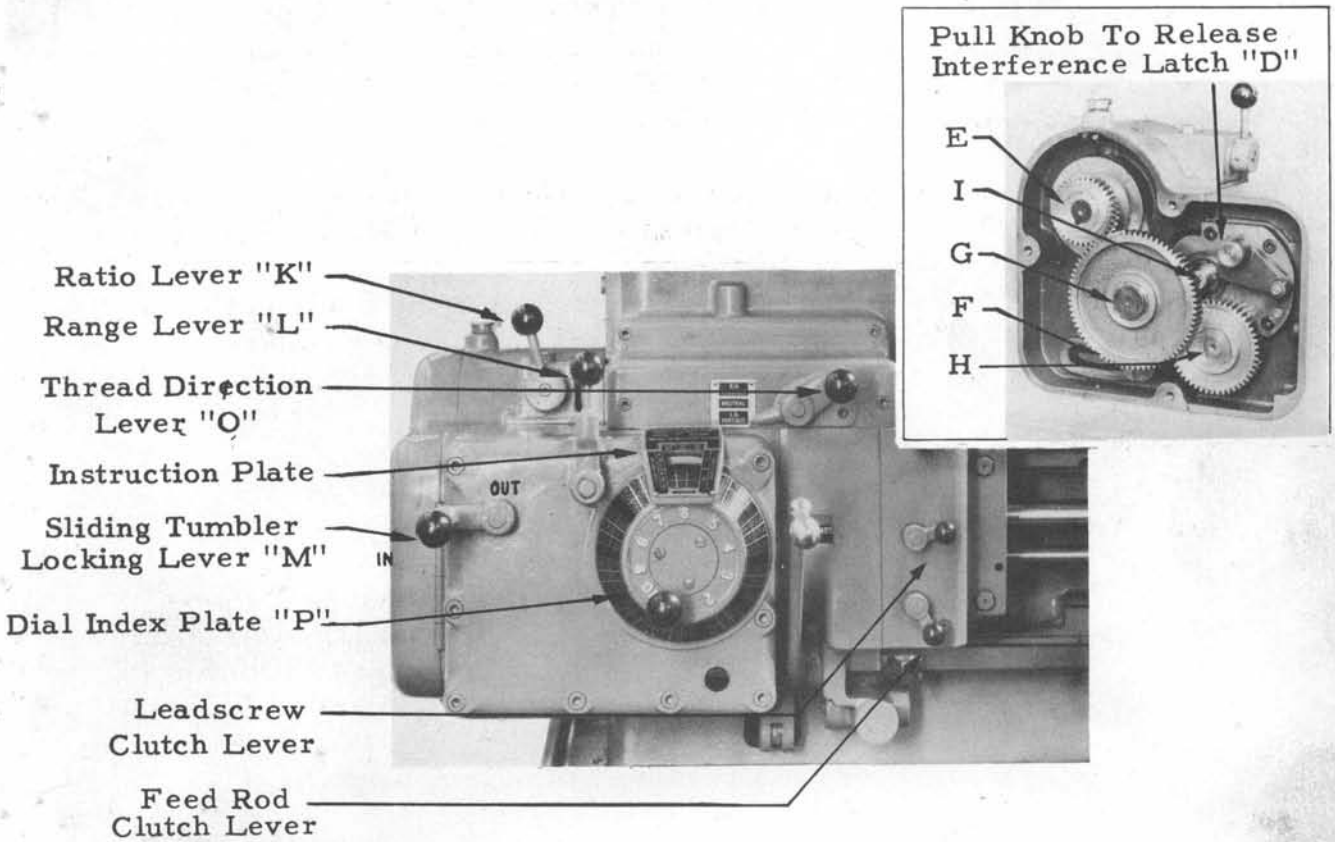

Figure 14-ET Quick Change Gear Box and End Gearing

Figure 14-ET illustrates the totally enclosed quick change gear box and end gearing for the 14" and 16" Heavy Duty and 20" Medium Duty Engine and Toolmaker Lathes.

On the Engine Lathes, the direction of rotation of the leadscrew and feed rod can be controlled by positioning the Thread Direction Lever "O", which shifts a multiple tooth clutch in the thread and feed train inside the headstock. When feeding, Lever "O" is placed in either the "R.H." or "L.H." position and left there. The direction of feed, both cross and longitudinal, is controlled by the Feed Direction Lever on the apron which shifts the double reversing gear in the apron. When chasing threads, Lever "O" is placed in either the "R.H." or "L.H." position depending upon whether a right hand or left hand thread is to be chased.

Only the Toolmaker Lathes are equipped with Reverse to Leadscrew, which is operated by a lever attached to the right hand side of the apron. The lever rotates the lowest rod mounted on the front of the bed and shifts a two-sided single tooth clutch mounted in the thread and feed gear train inside the headstock in order to control the direction of rotation of the leadscrew and feed rod. This feature provides a means of changing the direction of feeding or

thread chasing under power. In chasing threads, it is thus possible to stop and reverse the direction of travel of the carriage without opening the half nuts, such as in the case of chasing odd threads that cannot be picked up with the thread indicator. A single tooth clutch is used in order to maintain register between the lead of the work piece and the leadscrew. The adjustable automatic carriage stops are also made operable when thread chasing by means of the Reverse to Leadscrew, as described below. This feature is particularly convenient when chasing in a blind hole or up to a shoulder.

On the Toolmaker Lathes, right or left hand threads are chased by controlling the travel of the carriage with the Reverse to Leadscrew. For left hand threads or leads, the lever is pulled up; for right hand threads or leads, it is pushed down. When feeding, the lever must remain in the lower position. The direction of feed, both cross and longitudinal may then be controlled by the Feed Direction Lever on the apron, which shifts the double reversing gear in the apron.

CAUTION: The Reverse to Leadscrew should not be operated at spindle speeds higher than 400 RPM. To that end, the latest machines incorporate an interlock which prevents moving the Reverse to Leadscrew Lever from its lower position except when the Feed Direction Lever on the apron is in the neutral position. Thus whenever the machine is set up for feeding, which normally involves the use of the high speeds, the Reverse to Leadscrew is inoperative.

Whenever a Spindle Nose Speed Reducer is used, the mechanical reverse to the spindle should be used instead of the Reverse to Leadscrew since the register between the work piece and leadscrew is broken by the reducer.

On both the Engine and Toolmaker Lathes, the Sliding Tumbler Locking Lever "M" must be moved to the "Out" position before it is possible to revolve the Dial Index Plate "P" to select the proper thread or feed. The lever is reengaged after the proper thread or feed has been selected. Pull Knob "K" must be positioned "In" or "Out" according to the instructions shown on the Instruction Plate for the particular thread or feed desired. Thread and Feed Range Lever "L" must also be set to the indicated position in accordance with instructions on the Instruction Plate. For the "A" position, move the lever to the center and pull out. For the "B" or "C" positions, move the lever in and then throw to the right or left as required.

On both the Engine and Toolmaker Lathes, the Leadscrew and Feed Rod Clutches are manually operated by the small levers at the right end of the quick change gear box. When chasing threads, the Leadscrew Clutch should be engaged and the Feed Rod Clutch disengaged. When feeding, the Feed Rod Clutch should be engaged and the Leadscrew Clutch disengaged.

On the Engine Lathes, adjustable automatic carriage stops are provided to control the longitudinal travel of the carriage in either direction when feeding only, and are completely inoperable when thread chasing operations are being perfo med. The square shaft running along the front of the bed has for its primary purpose the starting and stopping of the lathe by means of the rotary movement imparted by the control levers at the headstock and apron. In addition, however, it has an end movement by means of which the carriage travel, while feeding, can be automatically stopped. There are two dogs, one for each direction of carriage travel, which can be adjusted along the shaft for any desired length of travel. The carriage feeding against either of the dogs automatically disengages the Feed Rod Clutch at the left end of the feed rod, thus stopping the carriage. After the longitudinal feed is disengaged by either stop during feeding operations, a slight movement of the carriage in the opposite direction by means of the apron handwheel re-engages the clutch and the lathe is again ready for power feed. The longitudinal feed control lever on the apron must be disengaged before re-engaging the clutch. During thread chasing operations, the carriage is stopped either by disengaging the half nuts, or by stopping the entire machine with one of the levers on the square shaft.

CAUTION: On the Engine Lathes when thread chasing, the automatic carriage stops must be loose on the square shaft and moved out of the way. The safety stop which limits the total carriage travel toward the head end of the lathe, is also inoperable when thread chasing operations are being performed.

On the Toolmaker Lathes, adjustable automatic carriage stops are provided to control the longitudinal travel of the carriage in either direction when feeding or thread chasing. The square shaft running along the front of the bed has for its primary purpose the starting and stopping of the lathe by means of the rotary motion imparted by the control levers at the headstock and apron. In addition, however, it has an end movement by means of which the carriage travel can be automatically stopped. There are two dogs, one for each direction of carriage travel, which can be adjusted along the shaft for any desired length of travel. When the feed rod is in use, the carriage feeding against either of the dogs automatically disengages the Feed Rod Clutch at the left end of the feed rod, thus stopping the carriage. When the leadscrew is in use, the two-sided single tooth clutch in the feed gear train is disengaged through the Reverse to Leadscrew linkage as the Reverse to Leadscrew Lever is moved into neutral, thus stopping the carriage. After the carriage has been automatically stopped in thread chasing, it can be started in the opposite direction by the Reverse to Leadscrew Lever.

CAUTION: On the Toolmaker Lathes when thread chasing, the automatic carriage stops and the safety stop at the head end may not be used when the spindle is turning in reverse. Therefore, the stop dogs must be loose on the square shaft in that case. In feeding,

however, the automatic stops can be used, regardless of the direction of the rotation of the spindle.

The Feed Direction Lever must be in neutral when doing any thread chasing on the latest machines, since an interlock prevents the movement of the Reverse to Leadscrew Lever from the lower position except when the Feed Direction Lever is in neutral. It is possible to chase with the Feed Direction Lever in forward or reverse, but any intentional or accidental contacting of the automatic carriage stops or safety stop would result in a wreck.

On both the Engine and Toolmaker Lathes equipped with an English leadscrew, a thread indicator is furnished and attached to the right side of the carriage. In chasing threads which can be picked up by the thread indicator, the half nuts can be opened at the end of each cut and the carriage quickly returned by hand. It can be used for picking up all even, uneven, one-half, or one-quarter English threads. For even threads (2, 4, 6 etc.) close the half nuts at any line on the dial. For uneven threads (3, 5, 7 etc.) close the half nuts at any numbered line. For half threads (5-1/2, 6-1/2, 11-1/2 etc.) close the half nuts at any one-quarter revolution. For quarter-threads (2-1/4, 2-3/4, 3-1/4 etc.) close the half nuts at any one-half revolution. The indicator can be left engaged with the leadscrew at all times, even when the leadscrew is not revolving and must always be kept engaged when in use.

Both the Engine and Toolmaker Lathes are regularly furnished with an English leadscrew for obtaining the standard range of threads, leads and feeds shown in Table No. 1-ET. Alternately, the lathe can be equipped with a metric leadscrew for obtaining the standard range of metric leads and feeds shown in Table No. 6-ET. In addition, provision is made for the application of special gears, furnished at extra cost and only when ordered, making it possible to obtain metric leads and feeds on English leadscrew lathes, English threads, leads, and feeds on metric leadscrew lathes, as well as odd threads, or other special ranges of threads, leads and feeds. The following sections outline the various possibilities:

NOTE: For the convenience of customers in countries using the metric system, the latest machines that are shipped with an English leadscrew and metric translating gears are also being supplied with a special Dial Index Plate "P" and Instruction Plate Window. The special plate has three columns to give (1) Threads per inch, (2) Feeds in millimeters and (3) Leads obtained with the metric translating gears. A special Instruction Plate, similar to Figure 15-ET, is also supplied with such machines to clearly show the gearing arrangement.

STANDARD RANGE OF THREADS, LEADS, AND FEEDS - ENGLISH LEADSCREW

Table No. 1-ET shows the threads, leads, and feeds obtainable on a standard Engine or Toolmaker Lathe with an English leadscrew. By referring to Figures 14-ET and 15-ET, it will be noted that a 36 T gear is mounted on Center "E" and a 72 T gear on Center "G", outer plane, while a 48 T gear is mounted on Center "G" and a 48 T gear on Center "H", inner plane, for threads and feeds. If leads are desired, the 48 T gear on Center "H" is moved to Center

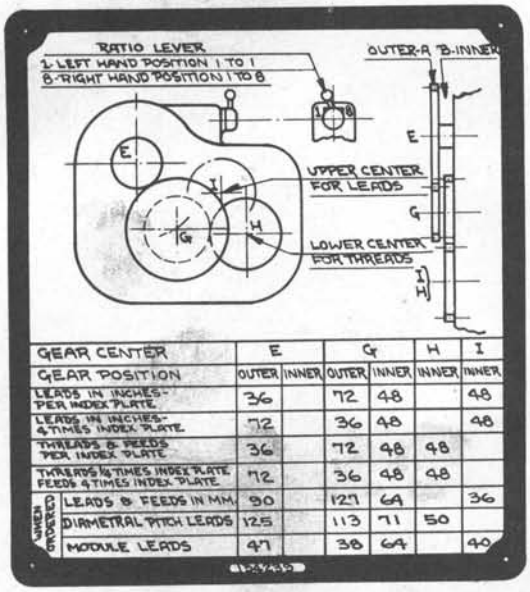

GEAR CENTER	E		G		H	I
GEAR POSITION	OUTER	INNER	OUTER	INNER	INNER	INNER
LEADS IN INCHES-PER INDEX PLATE	36		72	48		48
LEADS IN INCHES-4 TIMES INDEX PLATE	72		36	48		48
THREADS & FEEDS PER INDEX PLATE	36		72	48	48	
THREADS 4 TIMES INDEX PLATE FEEDS 4 TIMES INDEX PLATE	72		36	48	48	
WHEN GIVEN: LEADS & FEEDS IN MM.	90		127	64		36
WHEN GIVEN: DIAMETRAL PITCH LEADS	125		113	71	50	
WHEN GIVEN: MODULE LEADS	47		38	64		40

Figure 15-ET Instruction Plate for Lathes with English Leadscrew

"I", the upper center. If it is desired to have threads 1/4 times those shown in Table 1-ET and feeds and leads 4 times those shown, the 36 T and 72 T gears on Centers "E" and "G" may be transposed as shown.

THREADS PER INCH

Example: Required to chase 12 threads per inch. Since the 48 T gear will be mounted on Center "H", the lower center, the Interference Latch "D" will be in the upper position and the window at the right front end of the quick change gear box will read "THREADS-FEEDS". Set the Thread Direction Lever to either "R.H." or "L.H." depending upon whether a right hand or left hand thread is to be chased. On a Toolmaker Lathe, the lever is moved by the Reverse to Leadscrew Lever. Move Sliding Tumbler Locking Lever "M" to the "Out" position and turn the Dial Index Plate "P" until the desired thread appears in the Instruction Plate Window. Re-engage Lever "M" by moving to "In" position. Move Ratio Lever "K" to "1" and set the Range Lever "L" to "B" as indicated on the Instruction Plate. Power is transmitted to the carriage by engaging the half nuts properly with reference to the thread indicator.

	INDEX DIAL POSITION										LEVER	RATIO LEVER
	1	2	3	4	5	6	7	8	9	10		
LEADS IN INCHES	.0039	.0044	.0049	.0054	.0056	.0059	.0063	.0068	.0073	.0078	A	8
	.0078	.0087	.0097	.0108	.0112	.0117	.0126	.0136	.0146	.0156	B	
	.0156	.0175	.0195	.0215	.0225	.0234	.0253	.0273	.0292	.0312	C	
	.0312	.0352	.0390	.0430	.0445	.0469	.0508	.0547	.0586	.0625	A	1
	.0625	.0703	.0781	.0859	.0889	.0937	.1015	.1093	.1172	.125	B	
	.125	.1406	.1562	.1719	.1797	.1875	.2031	.2187	.2344	.250	C	
FOR ABOVE LEADS TRANSFER GEAR ON END OF BOX TO UPPER CENTER												
THREADS PER INCH	4	4½	5	5½	5¾	6	6½	7	7½	8	A	1
	8	9	10	11	11½	12	13	14	15	16	B	
	16	18	20	22	23	24	26	28	30	32	C	
	32	36	40	44	46	48	52	56	60	64	A	8
	64	72	80	88	92	96	104	112	120	128	B	
	128	144	160	176	184	192	208	224	240	256	C	
FEED IN THOUSANDTHS	46.9	41.7	37.5	34.0	32.6	31.3	28.9	26.8	25.0	23.4	A	1
	23.4	20.8	18.7	17.0	16.3	15.6	14.4	13.4	12.5	11.7	B	
	11.7	10.4	9.4	8.5	8.1	7.8	7.2	6.7	6.25	5.9	C	
	5.9	5.2	4.7	4.3	4.0	3.9	3.6	3.4	3.1	2.9	A	8
	2.9	2.6	2.3	2.1	2.0	1.9	1.8	1.7	1.6	1.5	B	
	1.45	1.3	1.15	1.05	1.0	.95	.90	.85	.80	.75	C	
	1	2	3	4	5	6	7	8	9	10		

TABLE 1-ET Standard Threads, Leads, and Feeds For Lathes With English Leadscrew.

LEADS IN INCHES

Example: Required to cut a lead of .0068". Since the 48 T gear will be mounted on Center "I", the upper center, the Interference Latch "D" will be in the lower position and the window at the right front end of the quick change gear box will read "LEADS". Set the Thread Direction Lever to either "R.H." or "L.H." depending upon whether a right hand or left hand thread is to be chased. On a Toolmaker Lathe, the Lever is moved by the Reverse to Leadscrew Lever. Move the Sliding Tumbler Locking Lever "M" to the "Out" position and turn the Dial Index Plate "P" until the desired lead appears in the Instruction Plate Window. Re-engage Lever "M" by moving to "In" position. Move Ratio Lever "K" to "8" and set the Range Lever "L" to "A" as indicated on the Instruction Plate. Power is transmitted to the carriage by engaging the half nuts. Since it is not possible to use the thread indicator in this case to pick up the lead for each successive pass of the tool, it is necessary to reverse the lathe carriage with the half nuts closed by means of the Reverse to Leadscrew, if available, or the mechanical reverse to the spindle.

FEEDS IN THOUSANDTHS PER REVOLUTION OF SPINDLE

Example: Required to obtain a feed of .0094" per revolution. Since the 48 T gear will be mounted on Center "H", the lower center, the Interference Latch "D" will be in the upper position and the window at the right front end of the quick change gear box will read "THREADS-FEEDS" Set the Thread Direction Lever to "R.H." or, in the case of a Toolmaker Lathe, push the Reverse to Leadscrew Lever down. For feeding toward the headstock or toward the center of the lathe, the Feed Direction Lever on the apron must then be in the lower position, and vice-versa. Move the Sliding Tumbler Locking Lever "M" to "Out" and turn the Dial Index Plate "P" until the desired feed appears in the Instruction Plate Window, re-engage Lever "M" by moving to "In" position. Move Ratio Lever to "1" and set the Range Lever "L" to "C" as indicated on the Instruction Plate. Power is transmitted to the cross slide or carriage by engaging the cross or longitudinal feed at the front of the apron.

LEADS OBTAINABLE WITH SPECIAL GEARS - ENGLISH LEADSCREW

METRIC LEADS AND FEEDS

Table No. 2-ET shows the range of metric leads in millimeters and feeds in millimeters per revolution of the spindle obtainable when special metric translating gears, which are furnished at extra cost and only when ordered, are applied to the machine. By referring to Figure 15-ET, it will be noted that a 90 T gear is mounted on Center "E" meshing with a 127 T gear mounted on Center "G", outer plane. On the inner plane, a 64 T gear is mounted on Center "G" meshing with a 36 T gear on Center "I". Since the Interference Latch "D" will be in the lower position, the window at the right front end of the quick change gear box will

131125	INDEX DIAL POSITION / POSITION DU TABLEAU DE DIVISION / STELLUNGEN DES SKALARINGES / STAND SCHUIFHEFBOOM										LEVER / LEVIER / HEBEL / HEFBOOM	RATIO LEVER / LEVIER DES RAPPORTS / OMSCHAKELHEFBOOM / UEBERSETZUNGS-HEBEL
	1	2	3	4	5	6	7	8	9	10		
LEADS IN M.M.-STEIGUNGEN IN M.M. / PAS EN M.M. - SPOEDEN IN M.M.	0.25	0.281	0.312	0.344	0.359	0.375	0.406	0.437	0.469	0.50	A	8
	0.50	0.562	0.625	0.687	0.719	0.750	0.812	0.875	0.937	1	B	
	1	1.125	1.25	1.375	1.437	1.50	1.625	1.75	1.875	2	C	
	2	2.25	2.50	2.75	2.875	3	3.25	3.50	3.75	4	A	1
	4	4.50	5	5.50	5.75	6	6.50	7	7.50	8	B	
	8	9	10	11	11.50	12	13	14	15	16	C	
FEEDS IN M.M.-VORSCHUEBE IN M.M. / AVANCES EN M.M.-VOEDING IN M.M.	0.047	0.053	0.059	0.064	0.067	0.070	0.076	0.082	0.088	0.094	A	8
	0.094	0.106	0.117	0.129	0.135	0.141	0.152	0.164	0.176	0.188	B	
	0.188	0.211	0.235	0.258	0.270	0.281	0.305	0.328	0.352	0.375	C	
	0.375	0.422	0.469	0.516	0.539	0.563	0.610	0.657	0.704	0.750	A	1
	0.750	0.844	0.938	1.032	1.079	1.126	1.220	1.313	1.407	1.501	B	
	1.500	1.688	1.876	2.064	2.158	2.251	2.440	2.627	2.814	3.001	C	
	1	2	3	4	5	6	7	8	9	10		

SEE INSTRUCTION PLATE #135926 / VOIR INSTRUCTIONS DU TABLEAU #135959 — SIEHE ANLEITUNGSTAFEL #135957 / ZIE TABEL #135958

Table 2-ET Metric Leads and Feeds Using Metric Translating Gears

read "LEADS". The machine is set up and operated exactly as that described for setting up the machine to cut standard English leads in inches. The correct position for the Dial Index Plate "P" is determined from the index dial position indicated in Table No. 2-ET, as well as the positions for the Ratio Lever "K" and Range Lever "L".

DIAMETRAL PITCH LEADS

Table No. 3 ET shows the range of diametral pitch leads obtainable when special translating gears, which are furnished at extra cost and only when ordered, are applied to the machine. The leads, in inches, that can be obtained as shown in Table No. 3-ET are those that are equal to the circular pitches of gears of the given diametral pitches. Thus a worm or hob can be chased for a certain diametral pitch directly as given. All of the diametral pitch leads shown can be obtained with a 125 T gear on Center "E" meshing with a 113 T gear on Center "G", outer plane. On the inner plane, a 71 T gear mounted on Center "G" meshes with a 50 T gear on Center "H" as shown in Figure 15-ET. Since the Interference Latch "D" will be in the upper position, the window at the right front end of the quick change gear box will read "THREADS-FEEDS". The machine is set up exactly as that described for setting up the machine to cut English threads per inch. The correct position for the Dial Index Plate "P" is

DIAMETRAL PITCH LEADS PAS AU DIAMETRAAL PITCH
DIAMETRAAL PITCH SPOEDEN DIAMETRAL PITCH STEIGUNGEN

1			8			RATIO LEVER-LEVIER DES RAPPORTS OMSCHAKELHEFBOOM-UEBERSETZUNGS HEBEL	INDEX DIAL POSITION POSITION DU TABLEAU PIVOTANT STAND VAN DRAAITABEL STELLUNGEN DER DREH TABELLE
A	B	C	A	B	C	LEVER HEFBOOM / LEVIER HEBEL	
4	8	16	32	64	128	1	
4½	9	18	36	72	144	2	
5	10	20	40	80	160	3	
5½	11	22	44	88	176	4	
5¾	11½	23	46	92	184	5	
6	12	24	48	96	192	6	
6½	13	26	52	104	208	7	
7	14	28	56	112	224	8	
7½	15	30	60	120	240	9	
8	16	32	64	128	256	10	109048

SEE INSTRUCTION PLATE VOIR INSTRUCTIONS DU TABLEAU
ZIE AANWUZINGEN TABEL SIEHE ANLEITUNGSTAFEL

Table 3-ET Diametral Pitch Leads

determined from the Index Dial position indicated in Table No. 3-ET, as well as the positions for the Ratio Lever "K" and Range Lever "L". Since it is not possible to use the thread indicator, in this case, to pick up the lead for each successive pass of the tool, it is necessary to reverse the lathe carriage with the half nuts closed by means of the Reverse to Lead-screw, if available, or the mechanical reverse to the spindle.

MODULE LEADS

Table No. 4-ET shows the range of module leads obtainable when special translating gears, which are furnished at extra cost and only when ordered, are applied to the machine. The leads, in millimeters, that can be obtained as shown in Table No. 4-ET are those that are equal to the circular pitches of gears of the given modules, in millimeters. Thus a worm or hob can be chased for a certain module in the metric system directly as given. All of the module leads shown can be obtained with a 47 T gear on Center "E" meshing with a 38 T gear on Center "G", outer plane. On the inner plane, a 64 T gear mounted on Center "G" meshes with a 40 T gear on Center "I", as shown in Figure 15-ET. Since the Interference Latch "D" will be in the lower position, the window at the right front of the quick change gear box will read "LEADS". The machine is set up and operated exactly as that described for setting up the machine to cut standard English leads in inches. The correct position for the Dial Index Plate "P" is determined from the index dial position indicated in Table No. 4-ET, as well as the positions for the Ratio Lever "K" and the Range Lever "L".

MODULE LEADS - PAS AU MODULE
MODUL SPOED - MODUL STEIGUNGEN

8			1			RATIO LEVER-LEVIER DES RAPPORTS OMSCHAKELHEFBOOM-UEBERSETZUNGS HEBEL	INDEX DIAL POSITION POSITION DU TABLEAU PIVOTANT STAND VAN DRAAITABEL STELLUNGEN DER DREH TABELLE
A	B	C	A	B	C	LEVER HEFBOOM / LEVIER HEBEL	
1/8	1/4	1/2	1	2	4	1	
9/64	9/32	9/16	1⅛	2¼	4½	2	
5/32	5/16	5/8	1¼	2½	5	3	
11/64	11/32	11/16	1⅜	2¾	5½	4	
23/128	23/64	23/32	1 7/16	2⅞	5¾	5	
3/16	3/8	3/4	1½	3	6	6	
13/64	13/32	13/16	1⅝	3¼	6½	7	
7/32	7/16	7/8	1¾	3½	7	8	
15/64	15/32	15/16	1⅞	3¾	7½	9	
1/4	1/2	1	2	4	8	10	131126

SEE INSTRUCTION PLATE VOIR INSTRUCTIONS DU TABLEAU
ZIE AANWUZINGEN TABLE SIEHE ANLEITUNGSTAFEL

Table 4-ET Module Leads

LEADS	THREADS PER INCH	DECIMAL EQUIV. OF LEADS	LEADS	THREADS PER INCH	DECIMAL EQUIV. OF LEADS	LEADS	THREADS PER INCH	DECIMAL EQUIV. OF LEADS	LEADS	THREADS PER INCH	DECIMAL EQUIV. OF LEADS
1/256	256	.0039	9/512	56 8/9	.0175	9/128	14 2/9	.0703	9/32	3 5/9	.2812
1/240	240	.0042	1/56	56	.0179	1/14	14	.0714	2/7	3 1/2	.2857
9/2048	227 5/9	.0044	1/52	52	.0192	1/13	13	.0769	4/13	3 1/4	.3077
1/224	224	.0045	5/256	51 1/5	.0195	5/64	12 4/5	.0781	5/16	3 1/5	.3125
1/208	208	.0048	1/48	48	.0208	1/12	12	.0833	1/3	3	.3333
5/1024	204 4/5	.0049	11/512	46 6/11	.0215	11/128	11 7/11	.0859	11/32	2 10/11	.3437
1/192	192	.0052	1/46	46	.0217	2/23	11 1/2	.0870	8/23	2 7/8	.3478
1/184	184	.0054	23/1024	44 12/23	.0225	23/256	11 3/23	.0899	23/64	2 18/23	.3594
23/4096	178 2/23	.0056	1/44	44	.0227	1/11	11	.0909	4/11	2 3/4	.3636
1/176	176	.0057	3/128	42 2/3	.0234	3/32	10 2/3	.0937	3/8	2 2/3	.3750
3/512	170 2/3	.0059	1/40	40	.0250	1/10	10	.1000	2/5	2 1/2	.4000
1/160	160	.0063	13/512	39 5/13	.0253	13/128	9 11/13	.1015	13/32	2 6/13	.4062
7/1024	146 2/7	.0068	7/256	36 4/7	.0273	7/64	9 1/7	.1093	7/16	2 2/7	.4375
1/144	144	.0069	1/36	36	.0278	1/9	9	.1111	4/9	2 1/4	.4444
15/2048	136 8/15	.0073	15/512	34 2/15	.0292	15/128	8 8/15	.1172	15/32	2 2/15	.4687
1/128	128	.0078	1/32	32	.0312	1/8	8	.1250	1/2	2	.5000
1/120	120	.0083	1/30	30	.0333	2/15	7 1/2	.1333	8/15	1 7/8	.5333
9/1024	113 7/9	.0087	9/256	28 4/9	.0352	9/64	7 1/9	.1406	9/16	1 7/9	.5625
1/112	112	.0089	1/28	28	.0357	1/7	7	.1429	4/7	1 3/4	.5714
1/104	104	.0096	1/26	26	.0385	2/13	6 1/2	.1538	8/13	1 5/8	.6154
5/512	102 2/5	.0097	5/128	25 3/5	.0390	5/32	6 2/5	.1562	5/8	1 3/5	.6250
1/96	96	.0104	1/24	24	.0417	1/6	6	.1666	2/3	1 1/2	.6667
11/1024	93 1/11	.0108	11/256	23 3/11	.0430	11/64	5 9/11	.1719	11/16	1 5/11	.6875
1/92	92	.0109	1/23	23	.0435	4/23	5 3/4	.1739	16/23	1 7/16	.6957
23/2048	89 1/23	.0112	23/512	22 6/23	.0449	23/128	5 13/23	.1797	23/32	1 9/23	.7187
1/88	88	.0114	1/22	22	.0455	2/11	5 1/2	.1818	8/11	1 3/8	.7273
3/256	85 1/3	.0117	3/64	21 1/3	.0469	3/16	5 1/3	.1875	3/4	1 1/3	.7500
1/80	80	.0125	1/20	20	.0500	1/5	5	.2000	4/5	1 1/4	.8000
13/1024	78 10/13	.0126	13/256	19 9/13	.0508	13/64	4 12/13	.2031	13/16	1 3/13	.8125
7/512	73 1/7	.0136	7/128	18 2/7	.0547	7/32	4 4/7	.2187	7/8	1 1/7	.8750
1/72	72	.0139	1/18	18	.0556	2/9	4 1/2	.2222	8/9	1 1/8	.8889
15/1024	68 4/15	.0146	15/256	17 1/15	.0586	15/64	4 4/15	.2344	15/16	1 1/15	.9375
1/64	64	.0156	1/16	16	.0625	1/4	4	.2500	1	1	1.0000
1/60	60	.0167	1/15	15	.0667	4/15	3 3/4	.2666			

Table 5-ET Leads, Threads, and Decimal Equivalents

LEADS NOT ON INDEX PLATES

When it is required to cut special leads not shown on the regular index plates, it is necessary to use special gears on Centers "G" and "H" or "G" and "I" or, if compounding is necessary, also on Centers "E" and "G", outer plane. To obtain the correct gear ratio, it is usual to select a lead by trial from the table of leads, threads, and decimal equivalents (Table No. 5-ET) and obtain the ratio by the following proportion:

$$\frac{\text{Drivers}}{\text{Driven}} = \frac{\text{Lead required}}{\text{Lead selected from table}}$$

No rule can be given for selecting a trial lead from the table. It should, however, be near the required lead, and preferably be a whole number. It must be a lead or thread regularly obtainable on the machine, but the table contains only those leads and threads.

Example: Required to cut a 1/27" lead. Select 24 threads per inch (1/24" lead) from the table. Then:

$$\frac{\text{Drivers}}{\text{Driven}} = \frac{1/27}{1/24} = \frac{24}{27} = \frac{48}{54}$$

is the ratio of gears required. The 48 T gear should, therefore, be used on Center "G" and the 54 T gear on Center "H", both on the inner plane. If a lead had been selected instead of a thread per inch, Center "I" would have been used

instead of Center "H". With the correct gears on the proper centers, the quick change gear box should be set up for the trial thread per inch used in the calculations.

Limitations in size of special gearing: The center distance on quadrant "F" is a fixed center distance of 5.400" and all gears meshing on Center "E" and "G" must be of the proper size to mesh on this center distance. The maximum size O. D. gear on Center "E" is 7-1/2". The maximum size O. D. gear on Center "G" is 8-3/8". The maximum size O. D. gear on Center "H" is 5-3/4". The maximum size O. D. gear on Center "I" is 5-3/4". The distance between Centers "G" and "H" are 4.600" minimum, 7.00" maximum. The distances between Centers "G" and "I" are 3-1/8" minimum, 6-1/4" maximum. The minimum size gears that can be used on any of the centers must be equivalent to 30T 10 pitch.

Compound Gears: If the sizes of the gears required for the particular thread or lead selected are too large, it is usually necessary to compound the gears. When compounding on quadrant "F", the driven gear on Center "G" meshing with the driving gear on Center "E" must be at least 2" smaller in diameter than twice the distance between the centers of gears meshing on Centers "G" and "H" or "G" and "I", to clear the retaining hub on the cover. The standard 1:2 ratio between the gears on Centers "E" and "G" must also be maintained in the compounding as shown below:

Example: Required to cut a .0328" lead. Select .0156" lead from the table. Then:

$$\frac{\text{Drivers}}{\text{Driven}} = \frac{.0328}{.0156} = \frac{328}{156} = \frac{82}{39}$$

An 82 T 10 pitch gear is too large to be used on Center "G". It, therefore, becomes necessary to use compound gears.

By factoring: $$\frac{82}{39} = \frac{2 \times 41}{39} = \frac{2}{1} \times \frac{41}{39}$$

By inserting the standard 1:2 ratio which must be maintained between the gears on Centers "E" and "G":

$$\frac{1}{2} \times \frac{2}{1} \times \frac{41}{39} = \frac{1}{1} \times \frac{41}{39} = \frac{54}{54} \times \frac{41}{39}$$

The first 54 T gear should, therefore, be used on Center "E" and the other 54 T gear should be used on Center "G", outer plane, while the 41 T gear should be used on Center "G" and the 39 T gear should be used on Center "I", inner plane. With the correct gears on the proper centers, the quick change gear box should be set up for the trial lead used in the calculations.

CAUTION: In calculating special leads not on the index plates, no leads coarser than 1" should be used. If it is required to chase coarser leads (up to 8"), an 8:1 Spindle Nose Speed Reducer, furnished at extra cost, should be used. The maximum lead of 1" (8" with Spindle Nose Speed Reducer) should not be used with a spindle speed higher than 79 R.P.M. in the standard range, 81 R.P.M. in the intermediate range, or 77 R.P.M. in the high range. In a like manner, for example, a lead of 1/2" (4" with Spindle Nose Speed Reducer) should not be used with a spindle speed higher than 171 RPM in the standard range, 174 R.P.M. in the intermediate range, or 165 R.P.M. in the high range.

STANDARD RANGE OF METRIC LEADS AND FEEDS - METRIC LEADSCREW

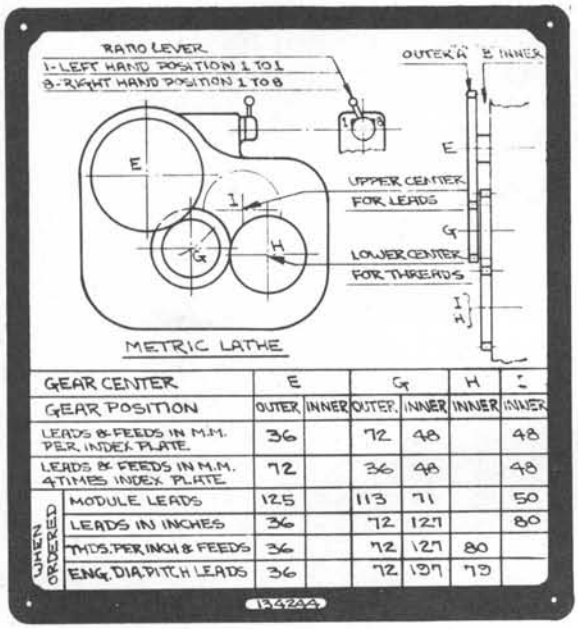

GEAR CENTER		E		G		H	I
GEAR POSITION		OUTER	INNER	OUTER	INNER	INNER	INNER
LEADS & FEEDS IN M.M. PER. INDEX PLATE.		36		72	48		48
LEADS & FEEDS IN M.M. 4 TIMES INDEX PLATE.		72		36	48		48
WHEN ORDERED	MODULE LEADS	125		113	71		50
	LEADS IN INCHES	36		72	127		80
	THDS. PER INCH & FEEDS	36		72	127	80	
	ENG. DIA. PITCH LEADS	36		72	127	73	

Figure 16-ET Instruction Plate For Lathes With Metric Leadscrew.

Table No. 6-ET shows the range of metric leads in millimeters and feeds in millimeters per revolution of the spindle obtainable on a standard Engine or Toolmaker Lathe with a metric leadscrew. By referring to Figures 14-ET and 16-ET, it will be noted that a 36 T gear is mounted on Center "E" and a 72 T gear on Center "G", outer plane, while a 48 T gear is mounted on Center "G" and a 48 T gear on Center "I", inner plane. If it is desired to have leads and feeds 4 times those shown, the 36 T and 72 T gears on Centers "E" and "G" may be transposed as shown.

LEADS IN MILLIMETERS

Example: Required to chase a 7.50 mm. lead. Since the interference Latch "D" will be in the lower position, the window at the right front end of the quick change gear box will read "LEADS". Set the Thread Direction Lever to either "R.H." or "L.H." depending upon whether a right hand or a left hand thread is to be chased. On a Toolmaker Lathe, the Lever is moved by the Reverse to Leadscrew Lever. Move the Sliding Tumbler Locking Lever "M" to the "Out" position and turn the Dial Index Plate "P" until the desired lead appears in the Instruction Plate Window. Re-engage Lever "M" by moving to "In" position. Move Ratio Lever "K" to "1" and set the Range Lever "L" to "C" as indicated on the Instruction Plate. Power is transmitted to the carriage by engaging the half nuts. Since it is not possible to use a thread indicator (and none is supplied) in this case to pick up the lead for each successive pass of the

tool, it is necessary to reverse the lathe carriage with the half nuts closed by means of the Reverse to Leadscrew, if available, or the mechanical reverse to the spindle.

	INDEX DIAL POSITION										LEVER	RATIO LEVER
	1	2	3	4	5	6	7	8	9	10		
LEADS IN M.M.	0.125	0.141	0.156	0.172	0.179	0.187	0.203	0.218	0.234	0.250	A	8
	0.250	0.281	0.312	0.344	0.359	0.375	0.406	0.437	0.469	0.500	B	
	0.500	0.562	0.625	0.687	0.719	0.750	0.812	0.875	0.937	1	C	
	1	1.125	1.25	1.375	1.437	1.50	1.625	1.750	1.875	2	A	1
	2	2.25	2.5	2.75	2.875	3	3.25	3.50	3.75	4	B	
	4	4.50	5	5.50	5.75	6	6.50	7	7.50	8	C	
FEEDS IN M.M.	0.019	0.021	0.023	0.026	0.027	0.028	0.030	0.032	0.035	0.037	A	8
	0.037	0.042	0.047	0.051	0.054	0.056	0.060	0.065	0.070	0.074	B	
	0.074	0.084	0.093	0.102	0.107	0.112	0.121	0.130	0.140	0.149	C	
	0.149	0.168	0.186	0.205	0.214	0.223	0.242	0.261	0.279	0.298	A	1
	0.298	0.335	0.372	0.409	0.428	0.446	0.484	0.521	0.558	0.596	B	
	0.596	0.670	0.745	0.819	0.856	0.893	0.968	1.042	1.117	1.191	C	
	1	2	3	4	5	6	7	8	9	10		

Table 6-ET Standard Metric Leads and Feeds for Lathes with Metric Leadscrew

FEEDS IN MILLIMETERS PER REVOLUTION OF SPINDLE.

Example: Required to obtain a feed of .107 mm. Since the Interference Latch "D" will be in the lower position, the window at the right front end of the quick change gear box will read "LEADS". Set the Thread Direction Lever to "R.H." or, in the case of a Toolmaker Lathe, push the Reverse to Leadscrew Lever down. For feeding toward the headstock or toward the center of the lathe, the Feed Direction Lever on the apron must then be in the lower position and vice-versa. Move the Sliding Tumbler Locking Lever "M" to "Out" and turn the Dial Index Plate "P" until the desired feed appears in the Instruction Plate Window. Re-engage Lever "M" by moving to "In" position. Move Ratio Lever "K" to "8" and set the Range Lever "L" to "C" as indicated on the Instruction Plate. Power is transmitted to the cross slide or carriage by engaging the cross or longitudinal feed at the front of the apron.

LEADS OBTAINABLE WITH SPECIAL GEARS - METRIC LEADSCREW

ENGLISH THREADS AND FEEDS

Table No. 7-ET shows the range of English threads per inch, and feeds in thousandths per revolution of the spindle obtainable when special English translating gears, which are furnished at extra cost and only when ordered, are applied to the machine. By referring to Figure 16-ET, it will be noted that a 36 T gear is mounted on Center "E" meshing with 72 T gear mounted on Center "G", outer plane. On the inner plane, a 127 T gear is mounted on Center "G" meshing with an 80 T gear on Center "H". Since the Interference Latch "D" will be in the upper position, the window at the right front end of the quick change gear box will read "THREADS-FEEDS". The machine is set up and operated exactly as that described for setting up the machine to cut metric leads or feeds. The correct position for the Dial Index Plate "P" is determined from the index dial position indicated in Table No. 7-ET, as well as the positions for the Ratio Lever "K" and the Range Lever "L".

INDEX DIAL POSITION / POSITION DU TABLEAU DE DIVISION / STELLUNGEN DES SKALARINGES / STAND SCHUIFHEF BOOM											LEVER / LEVIER / HEBEL / HEFBOOM	RATIO LEVER / LEVIER DES SUPPORTS / SCHUIFHEF BOOM
131127	1	2	3	4	5	6	7	8	9	10		
LEADS IN INCHES / SPOEDEN IN ENG. D.M. / STEIGUNGEN IN ZOLL / PAS EN POUCE	0.0078	0.0087	0.0097	0.0107	0.0112	0.0117	0.0126	0.0136	0.0146	0.0156	A	8
	0.0156	0.0175	0.0195	0.0214	0.0224	0.0234	0.0253	0.0273	0.0292	0.0312	B	
	0.0312	0.0351	0.0390	0.0429	0.0449	0.0468	0.0507	0.0546	0.0585	0.0625	C	
	0.0625	0.0703	0.0781	0.0859	0.0898	0.0937	0.1015	0.1093	0.1171	0.125	A	1
	0.125	0.1406	0.1562	0.1718	0.1796	0.1875	0.2031	0.2187	0.2343	0.25	B	
	0.25	0.2812	0.3125	0.3437	0.3593	0.375	0.4062	0.4375	0.4687	0.5	C	
FOR ABOVE LEADS TRANSFER GEAR ON END OF BOX TO UPPER CENTER VOOR BOVENSTAANDE SPOEDEN WIEL OP EINDE NORTONKAST VAN BENEDEN NAAR BOVEN VERPLAATSEN. FÜR OBIGE STEIGUNGEN SETZE MAN ZAHNRAD AUF OBERE ANTRIEBS WELLE AM VORSCHUBKASTEN POUR LES HAUTEURS DE PAS CI HAUT TRANSFÉREZ L'ENGRENAGE À LA FIN DE LA BOITE AU CENTRE SUPÉRIEUR												
THREADS PER INCH / GANGEN PER ENG. D.M. / GAENGE PER ZOLL / NOMBRE DE FILETS PAR POUCE	2	2 1/4	2 1/2	2 3/4	2 7/8	3	3 1/4	3 1/2	3 3/4	4	A	1
	4	4 1/2	5	5 1/2	5 3/4	6	6 1/2	7	7 1/2	8	B	
	8	9	10	11	11 1/2	12	13	14	15	16	C	
	16	18	20	22	23	24	26	28	30	32	A	8
	32	36	40	44	46	48	52	56	60	64	B	
	64	72	80	88	92	96	104	112	120	128	C	
FEED IN THOUSANDTHS / VOEDING IN DUIZENDSTE ENG. DM / VORSCHUBE IN TAUSENDSTEL ZOLL / ADVANCES EN MILLIEMES	74.5	66.	59.5	54.	52.	50.	46.	42.5	40.	37.2	A	1
	37.2	33.	29.7	27.	26.	25.	23.	21.2	20.	18.6	B	
	18.6	16.5	14.8	13.5	13.	12.5	11.5	10.6	10.	9.3	C	
	9.3	8.2	7.4	6.7	6.5	6.2	5.7	5.3	5.	4.6	A	8
	4.6	4.1	3.7	3.4	3.2	3.1	2.8	2.6	2.5	2.3	B	
	2.3	2	1.8	1.7	1.6	1.5	1.4	1.3	1.2	1.1	C	
	1	2	3	4	5	6	7	8	9	10		
SEE INSTRUCTION PLATE #131119 VOIR INSTRUCTIONS DU TABLEAU #131121							SIEHE ANLEITUNGSTAFEL #131120 ZIE TABEL #131122					

Table 7-ET English Threads, Leads, and Feeds Using English Translating Gears

ENGLISH LEADS

Table No. 7-ET shows the range of English leads in inches obtainable when special English translating gears, which are furnished at extra cost and only when ordered, are applied to the machine. By referring to Figure 16-ET, it will be noted that a 36 T gear is mounted on Center "E" meshing with a 72 T gear mounted on Center "G", outer plane. On the inner plane, a 127 T gear is mounted on Center "G" meshing with an 80 T gear mounted on Center "I". Since the Interference Latch "D" will be in the lower position, the window at the right front end of the quick change gear box will read "LEADS". The machine is set up and operated exactly as that described for setting up the machine to cut metric leads. The correct position for the Dial Index Plate "P" is determined from the index dial position indicated in Table No. 7-ET, as well as the positions for the Ratio Lever "K" and Range Lever "L".

ENGLISH DIAMETRAL PITCH LEADS

Table No. 3-ET shows the range of English diametral pitch leads obtainable when special translating gears, which are furnished at extra cost and only when ordered, are applied to the machine. The leads, in inches, that can be obtained as shown in Table No. 3-ET are those that are equal to the circular pitch of gears of the given diametral pitches. Thus a worm or hob can be chased for a certain diametral pitch directly as given. All of the diametral pitch leads shown can be obtained with a 36 T gear on Center "E" meshing with a 72 T gear on Center "G", outer plane. On the inner plane, a 197 T gear mounted on Center "G" meshes with a 79 T gear on Center "H", as shown in Figure 16-ET. Since the Interference Latch "D" will be in the upper position, the window at the right front end of the quick change gear box will read "THREADS-FEEDS". The machine is set up exactly as that described for setting up the machine to cut metric leads. The correct position for the Dial Index Plate "P" is determined from the index dial position indicated in Table No. 3-ET, as well as the positions for the Ratio Lever "K" and Range Lever "L".

MODULE LEADS

Table No. 4-ET shows the range of module leads obtainable when special translating gears, which are furnished at extra cost and only when ordered, are applied to the machine. The leads, in millimeters, that can be obtained as shown in Table No. 4-ET are those that are equal to the circular pitches of gears of the given modules, in millimeters. Thus a worm or hob can be chased for a certain module in the metric system directly as given. All of the module leads shown can be obtained with a 125 T gear on Center "E" meshing with a 113 T gear on Center "G", outer plane. On the inner plane, a 71 T gear mounted on Center "G" meshes with a 50 T gear mounted on Center "I", as shown in Figure 16-ET. Since the Interference Latch "D" will be in the lower position, the window at the right front end of the quick change gear box will

read "LEADS". The machine is set up and operated exactly as that described for setting up the machine to cut metric leads. The correct position for the Dial Index Plate "P" is determined from the index dial position indicated in Table No. 4-ET, as well as the positions for the Ratio Lever "K" and the Range Lever "L"

LEADS NOT ON INDEX PLATES

When it is required to cut special leads not shown on the regular index plates, it is necessary to use special gears on Centers "G" and "H" or "G" and "I" or, if compounding is necessary, also on Centers "E" and "G", outer plane. To obtain the correct gear ratio, it is usual to select a lead by trial from the table of standard metric leads (Table No. 6-ET) and obtain the ratio by the following proportions:

$$\frac{\text{Drivers}}{\text{Driven}} = \frac{\text{Lead required}}{\text{Lead selected from table}}$$

No rule can be given from selecting a trial lead from the table. It should, however, be near the required lead, and preferably be a whole number. It must be a lead regularly obtainable on the machine, but the table contains only those leads.

Example: Required to cut a 5.25 mm. lead. Select 5.50 mm. lead from the table. Then:

$$\frac{\text{Drivers}}{\text{Driven}} = \frac{5.25}{5.50} = \frac{42}{44}$$

is the ratio of gears required. The 42 T gear should, therefore, be used on Center "G" and the 44 T gear on Center "I", both on the inner plane. With the correct gears on the proper centers, the quick change gear box should be set up for the trial lead used in the calculations.

Limitations in size of special gearing: The center distance on quadrant "F" is a fixed center distance of 5.400" and all gears meshing on Centers "E" and "G" must be of the proper size to mesh on this center distance. The maximum size O.D. gear on Center "E" is 7-1/2". The maximum size O.D. gear on Center "G" is 8-3/8". The maximum size O.D. gear on Center "H" is 5-3/4". The maximum size O.D. gear on Center "I" is 5-3/4". The distance between Centers "G" and "H" are 4.600" minimum, 7.000" maximum. The distances between Centers "G" and "I" are 3-1/8" minimum, 6-1/4" maximum. The minimum size gears that can be used on any of the centers must be equivalent to 30 T 10 pitch.

Compound gears: If the sizes of the gears required for the particular lead selected are too large, it is usually necessary to compound the gears. When compounding on quadrant "F", the driven gear on Center "G" meshing with the driving gear on Center "E" must be at least 2" smaller in diameter

than twice the distance between the centers of gears meshing on Centers "G" and "H" or "G" and "I", to clear the retaining hub on the cover. The standard 1:2 ratio between the gears on Centers "E" and "G" must also be maintained in the compounding as shown below:

Example: Required to cut a 0.504 mm. lead. Select 0.234 mm. lead from the table. Then:

$$\frac{\text{Drivers}}{\text{Driven}} = \frac{.504}{.234} = \frac{504}{234} = \frac{84}{39}$$

An 84 T 10 pitch gear is too large to be used on Center "G". It, therefore, becomes necessary to use compound gears.

By factoring: $$\frac{84}{39} = \frac{2 \times 42}{39} = \frac{2}{1} \times \frac{42}{39}$$

By inserting the standard 1:2 ratio which must be maintained between the gears on Centers "E" and "G":

$$\frac{1}{2} \times \frac{2}{1} \times \frac{42}{39} = \frac{1}{1} \times \frac{42}{39} = \frac{54}{54} \times \frac{42}{39}$$

The first 54 T gear should, therefore, be used on Center "E" and the other 54 T gear should be used on Center "G", outer plane, while the 42 T gear should be used on Center "G" and the 39 T gear should be used on Center "I", inner plane. With the correct gears on the proper centers, the quick change gear box should be set up for the trial lead used in the calculations.

CAUTION: In calculating special leads not on the index plates, no leads coarser than 32 mm. should be used. If it is required to chase coarser leads (up to 256 mm.), an 8:1 Spindle Nose Speed Reducer, furnished at extra cost, should be used. The maximum lead of 32 mm. (256 mm. with Spindle Nose Speed Reducer) should not be used with a spindle speed higher than 79 R.P.M. in the standard range, 81 R.P.M. in the intermediate range, or 77 R.P.M. in the high range. In a like manner, for example, a lead of 16 mm. (128 mm. with Spindle Nose Speed Reducer) should not be used with a spindle speed higher than 171 R.P.M. in the standard range, 174 R.P.M. in the intermediate range, or 165 R.P.M. in the high range.