REPLACEMENT PARTS MANUAL

PUB 90 (FORMERLY HR-21)

1H - 2HL

KNEE TYPE MILLING MACHINE

For 3hp No. 1

MODEL H

and

3hp No. 2

MODEL HL

Plain — Universal — Swivel Head Vertical

COPYRIGHT 1952
© Kearney & Trecker Corporation
West Allis, Wisconsin

PATENT NOTICE: The novel features of the KEARNEY & TRECKER Machine Tools. Attachments, Systems and programs illustrated and described herein are protected by issued and pending United States and Foreign Patents. The manufacturer reserves the right to improve, change or modify the construction of these machine tools, attachments, systems, or the related programs, or any part thereof as he may see fit, without incurring obligations to make like changes on KEARNEY & TRECKER Machine Tools, Attachments, Systems or Programs previously sold.

Kearney & Trecker Corporation

11000 THEODORE TRECKER WAY MILWAUKEE, WI USA 53214
TELEPHONE 414-476-8300
TELEX 026-663 CABLE TRECKERMIL

FOREWORD

This is a replacement parts manual for the 3hp No. 1 Model H and No. 2 Model HL Plain, Universal and Swivel Head Vertical Kearney & Trecker milling machines. In the purchase of these machine tools you possess an absolute guarantee of precision built equipment - designed and manufactured so as to assure the greatest measure of long life performance. There remains, however, still another responsibility - that of providing prompt service for replacement parts and general maintenance resulting from natural wear or accidental damage to the machine - to keep them in sound operating condition. This manual will help you do that quickly.

About the manual itself; every effort has been made to make this book as clear and concise as is practical to avoid delay and misunderstanding in ordering parts. The various assemblies are arranged in a natural sequence and are indexed visually on pages 4 and 5. (Figs. 2 and 3)

Instructions noted in the following pages must be followed carefully. In several instances it will be observed that certain parts are mated at the home factory. Such parts cannot be replaced individually and must be sent out in pairs or sets.

Kearney & Trecker maintains, insofar as possible, a complete record, based on machine serial number, of every machine built. To insure prompt and efficient service it is imperative, therefore, to include the machine size, model and serial number with every inquiry or order. This information will be found stamped in the lower border of the trademark located on the left side of the column.

It is our intention to continually improve the service you receive from Kearney & Trecker milling machines and make the parts replacement problem a simple procedure. By following the instructions for identifying and ordering parts, given on the next page, you will be assured of prompt service.

KEARNEY & TRECKER
Corporation
Milwaukee 14, Wisconsin
U.S.A.

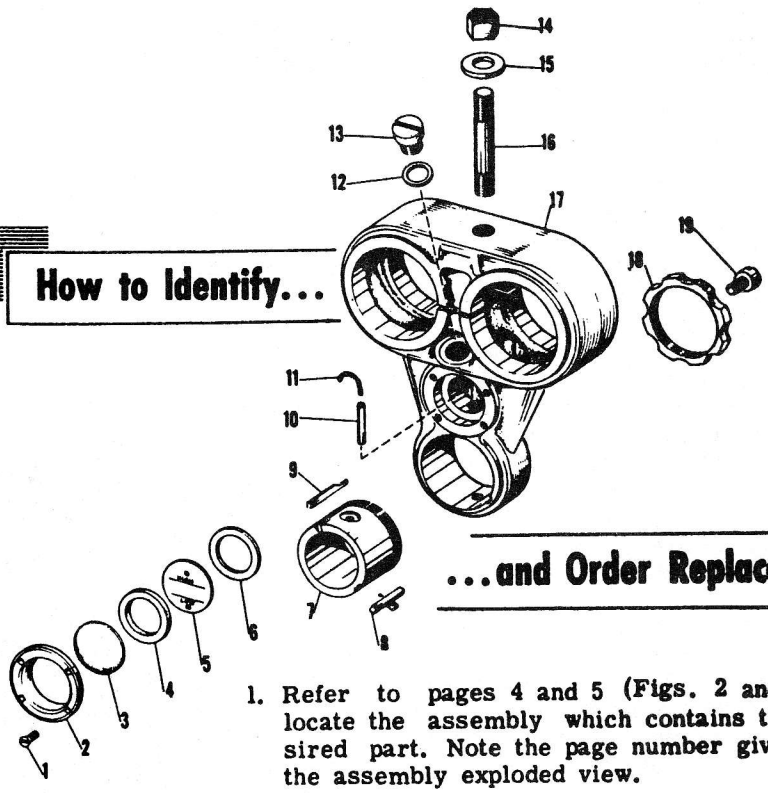

How to Identify...

...and Order Replacement Parts

1. Refer to pages 4 and 5 (Figs. 2 and 3) to locate the assembly which contains the desired part. Note the page number given for the assembly exploded view.

2. Locate the desired part and its item number in the assembly exploded view. For convenience and clearness in showing parts on some large units, it was necessary to remove them from the proper location in relation to the main casting. Such assemblies are indicated by a letter in a circle A, B, C, etc. A brief study of the exploded view will show where such sub-assemblies properly belong.

3. In the parts list on the facing page, find the corresponding item number to determine the part name description and code number.

4. Send the part name description, the code number and the SIZE, MODEL and SERIAL NUMBER OF THE MACHINE (stamped in the lower border of the trademark located on the left side of the column) to the Service Department, Kearney & Trecker Corporation, Milwaukee 14, Wisconsin, U.S.A.

5. For service by telephone, call Greenfield 6-8300, and give the information in paragraph 4 above.

Replacement Parts Manual

3hp No. 1 Model H and No. 2 Model HL Plain-Universal-Swivel Head Vertical

Kearney & Trecker—Milwaukee Milling Machines

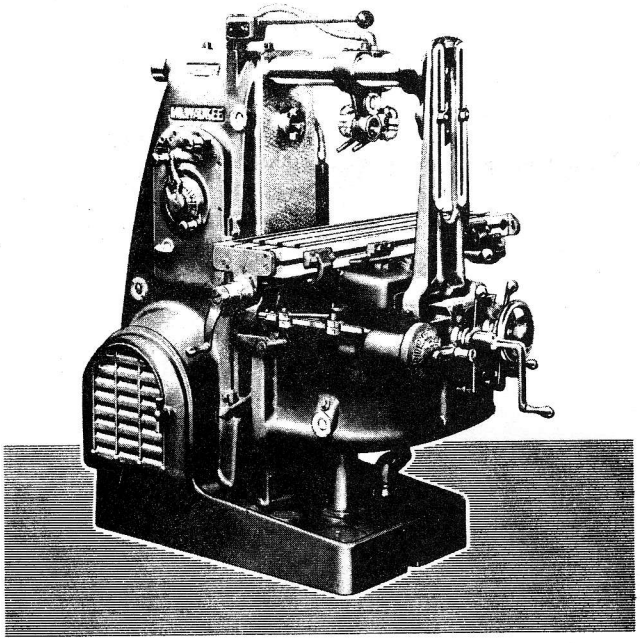

MODEL HL
3hp NO. 2
PLAIN STYLE

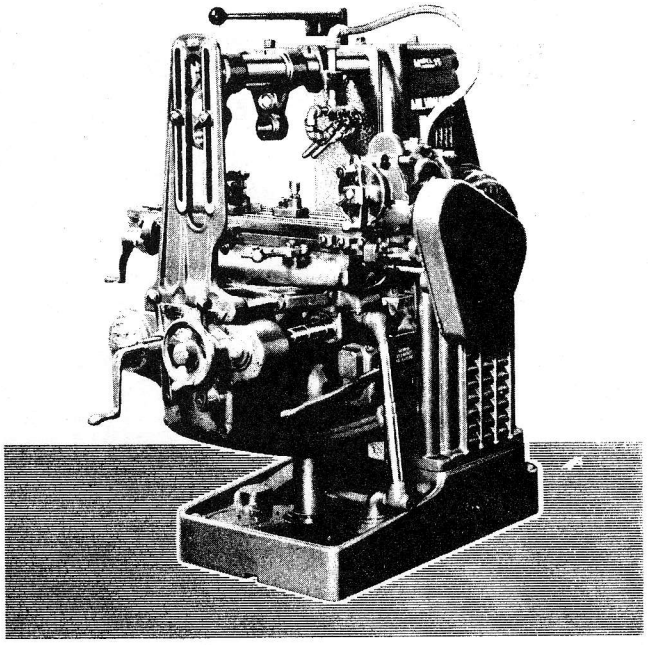

MODEL H
3hp NO. 1
UNIVERSAL STYLE

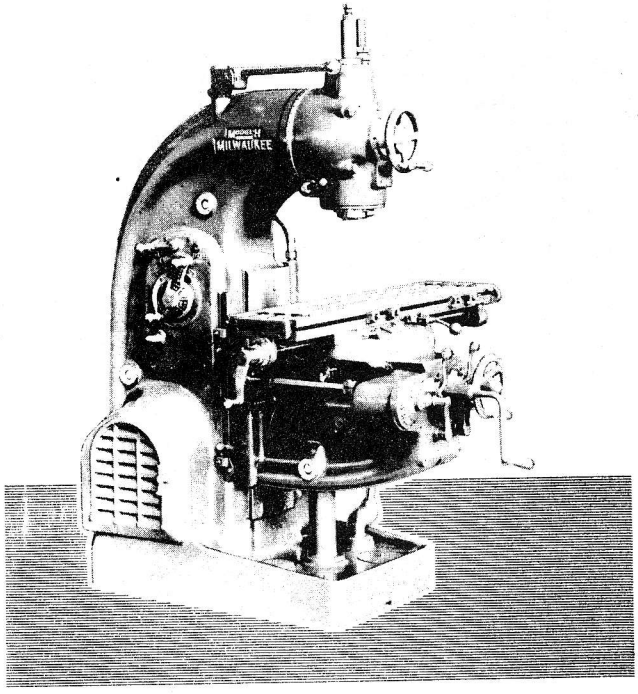

MODEL HL
3hp NO. 2
SWIVEL HEAD VERTICAL STYLE

Figure 1

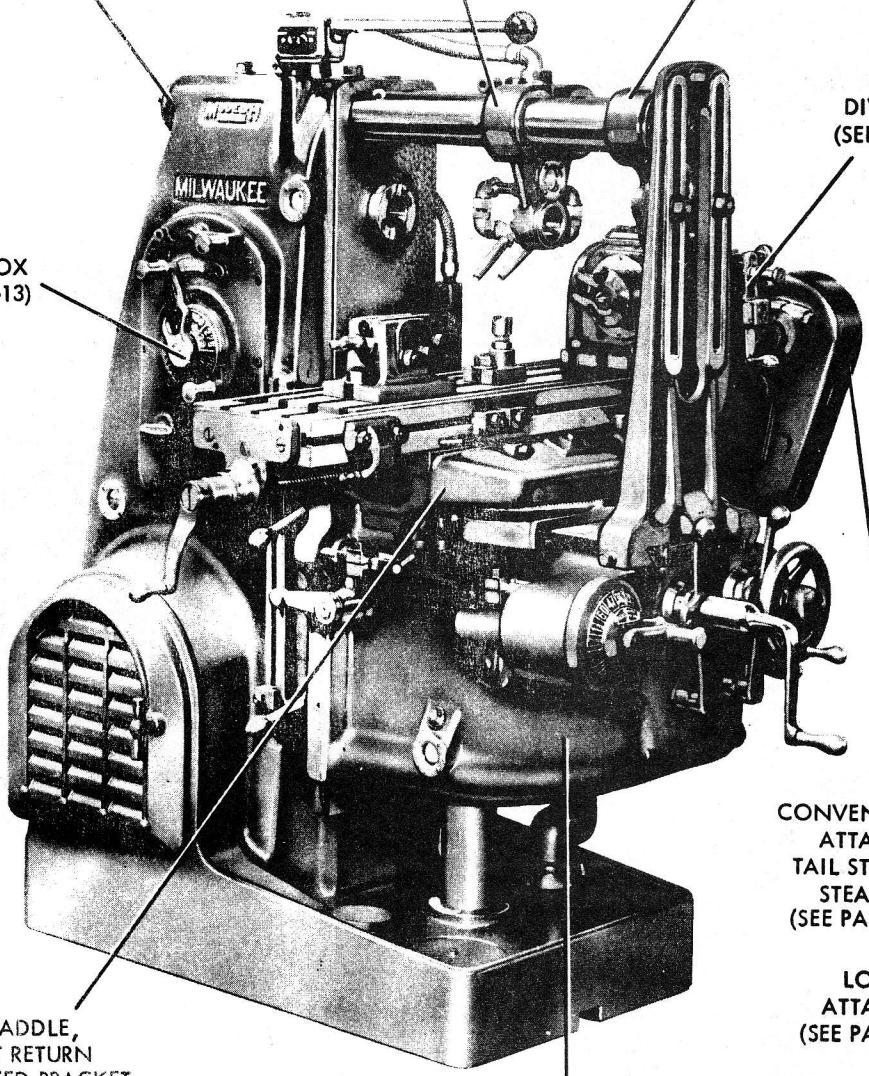

INDEX TO UNIT ASSEMBLIES FOR PLAIN AND UNIVERSAL MACHINES

Figure 2

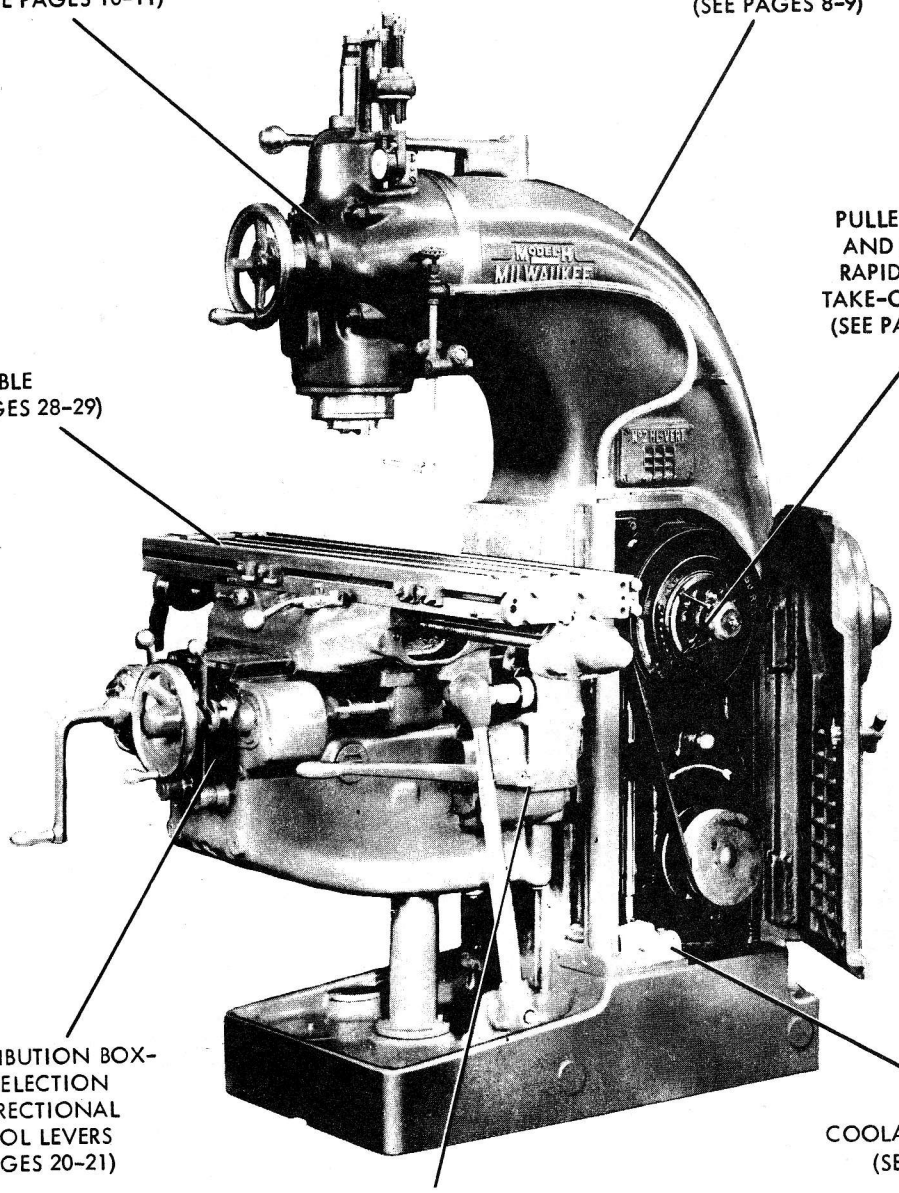

INDEX TO UNIT ASSEMBLIES FOR SWIVEL HEAD VERTICAL MACHINES

Figure 3

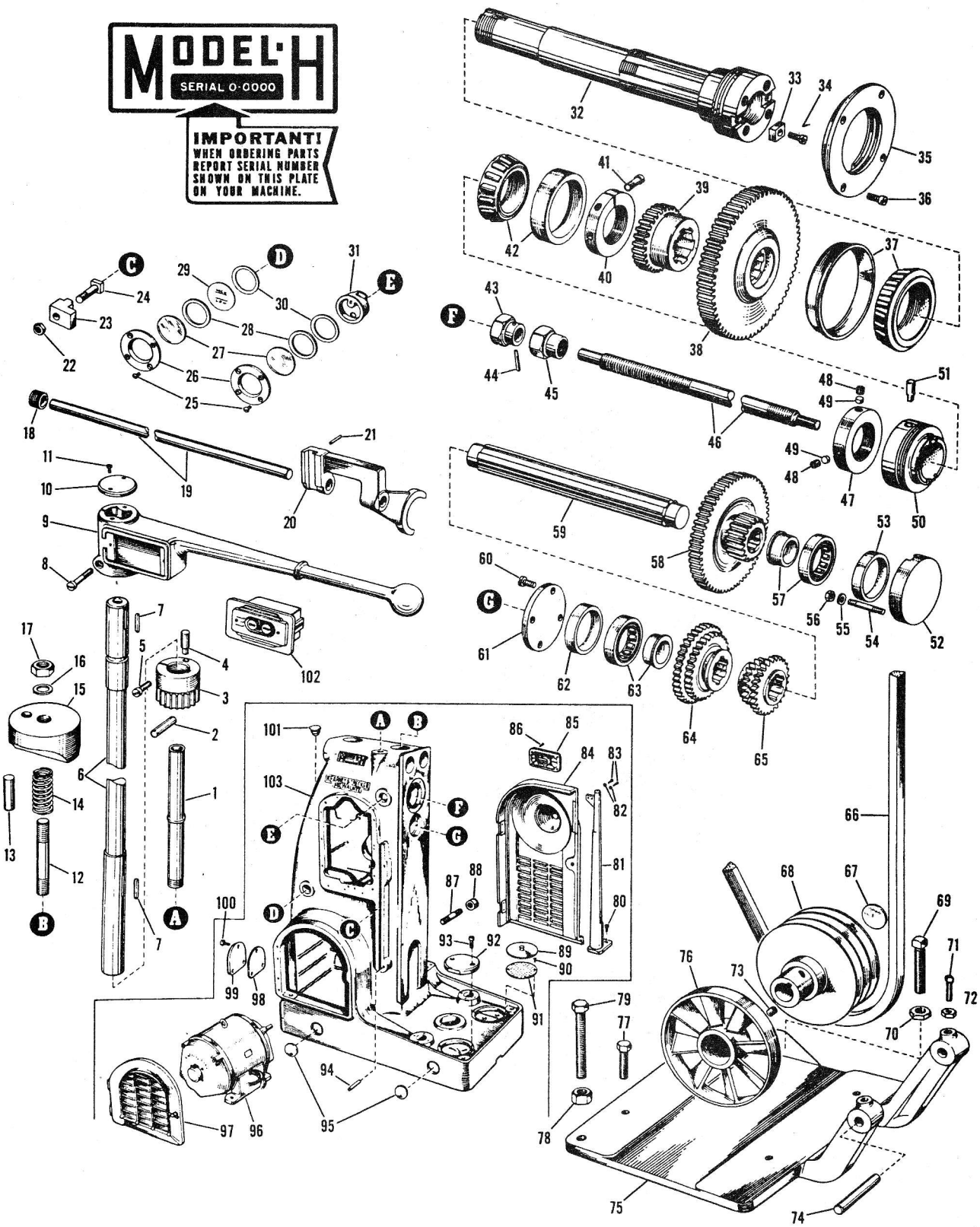

Figure 4. Horizontal Column, Spindle, Speed Drive Train and Motor Mount

Figure 4. Horizontal Column, Spindle, Speed Drive Train and Motor Mount

Item No.	Part Name and Description	Code No. 1H	Code No. 2HL	Qty.
1	Starting lever stand pipe	1H-A1	2HL-A1	1
2	Starting lever stop pin	1H-A2	2HL-A2	1
3	Starting lever gear	1H-A3	2HL-A3	1
4	Starting lever stop pin	1H-A4	2HL-A4	1
5	Fil hd screw, 3/8-16 x 1-1/4 in.	1H-A5	2HL-A5	1
6	Starting lever shaft	1H-A6	2HL-A6	1
7	Key	1H-A7	2HL-A7	2
8	Screw	1H-A8	2HL-A8	1
9	Starting lever	1H-A9	2HL-A9	1
10	Starting lever cover	1H-A10	2HL-A10	1
11	Screw	1H-A11	2HL-A11	2
12	Stud, 5/8-11 x 3-1/2 in.	1H-A12	2HL-A12	2
13	Clamp block pin	1H-A13	2HL-A13	2
14	Spring	1H-A14	2HL-A14	2
15	Overarm clamp	1H-A15	2HL-A15	2
16	Washer	1H-A16	2HL-A16	2
17	Nut, 5/8-11	1H-A17	2HL-A17	2
18	Shifter rod fork screw, 1-1/16-16 x 1 in.	1H-A18	2HL-A18	1
19	Shifter fork rod	1H-A19	2HL-A19	1
20	Range change shifter fork	1H-A20	2HL-A20	1
21	Acme blue label dowel, 1/4 x 1 in.	1H-A21	2HL-A21	1
22	Nut, 7/16-14	1H-A22	2HL-A22	2
23	Vertical feed trip dog	1H-A23	2HL-A23	2
24	T-bolt 7/16-14 x 2-1/8 in.	1H-A24	2HL-A24	2
25	Fil hd screw, #10-32 x 3/8 in.	1H-A25	2HL-A25	8
26	Oil gage plate	1H-A26	2HL-A26	2
27	Oil gage glass	1H-A27	2HL-A27	2
28	Oil gage washer	1H-A28	2HL-A28	2
29	Oil gage plate	1H-A29	2HL-A29	1
30	Oil gage washer	1H-A30	2HL-A30	2
31	Sight oil flow gage	1H-A31	2HL-A31	1
32	Spindle	1H-A32	2HL-A32	1
33	Spindle drive key	1H-A33	2HL-A33	2
34	Fil hd screw, 1/4-20 x 7/8 in.	1H-A34	2HL-A34	2
35	Spindle oil shield	1H-A35	2HL-A35	1
36	Fil hd screw, 5/16-18 x 11/16 in.	1H-A36	2HL-A36	4
37	Timken bearing, 3920B-3982	1H-A37	2HL-A37	1
38	Large spindle gear	1H-A38	2HL-A38	1
39	Small spindle gear	1H-A39	2HL-A39	1
40	Spindle nut	1H-A40	2HL-A40	1
41	Allen hd cap screw, 7/16 x 1-1/4 in.	1H-A41	2HL-A41	1
42	Timken bearing, 432-438W	1H-A42	2HL-A42	1
43	Draw-in bolt head	1H-A43	2HL-A43	1
44	Taper pin, #2 x 1 in.	1H-A44	2HL-A44	1
45	Draw bolt nut, 5/8-11	1H-A45	2HL-A45	1
46	Draw-in bolt	1H-A46	2HL-A46	1
47	Collar nut	1H-A47	2HL-A47	1
48	Hex hollow hd set screw, 3/8-24 x 3/8 in.	1H-A48	2HL-A48	2
49	Collar nut shoe	1H-A49	2HL-A49	2
50	Rear oil slinger	1H-A50	2HL-A50	1
51	Pin	1H-A51	2HL-A51	1
52	Primary shaft bearing cover	1H-A52	2HL-A52	1
53	Primary shaft bearing spacer	1H-A53	2HL-A53	1
54	Bearing cover stud, 5/16-18 x 2-1/4 in.	1H-A54	2HL-A54	2
55	Washer	1H-A55	2HL-A55	2
56	Nut, 5/16-18	1H-A56	2HL-A56	2
57	Hyatt bearing, R-1207TS	1H-A57	2HL-A57	1
58	Spindle drive sliding gear	1H-A58	2HL-A58	1
59	Primary speed change shaft	1H-A59	2HL-A59	1
60	Screw	1H-A60	2HL-A60	4
61	Primary shaft rear bearing cover	1H-A61	2HL-A61	1
62	Primary shaft bearing spacer	1H-A62	2HL-A62	1
63	Hyatt bearing, R-1207TS	1H-A63	2HL-A63	1
64	Rear primary sliding gear	1H-A64	2HL-A64	1
65	Front primary sliding gear	1H-A65	2HL-A65	1
66	Texrope belt, B-60	1H-A66	2HL-A66	2
67	Expansion plug, 1-1/2 in. dia	1H-A67	2HL-A67	1
68	Motor sheave (for 1750 rpm motor)	1H-A68a	2HL-A68a	1
	Motor sheave (for 1450 rpm motor)	1H-A68b	2HL-A68b	1
69	Square hd screw, 5/8-11 x 2-3/4 in.	1H-A69	2HL-A69	1
70	Nut, 5/8-11	1H-A70	2HL-A70	1
71	Square hd cup pt set screw, 3/8 x 1-1/4 in.	1H-A71	2HL-A71	2
72	Nut, 3/8-16	1H-A72	2HL-A72	2
73	Flat pt Allen hd set screw, 3/8-16 x 3/4 in.	1H-A73	2HL-A73	2
74	Motor base hinge pin	1H-A74	2HL-A74	2
75	Motor base	1H-A75	2HL-A75	1
76	Motor fan	1H-A76	2HL-A76	1
77	Motor hold down screw	1H-A77	2HL-A77	4
78	Nut, 5/8-11	1H-A78	2HL-A78	1
79	Hex hd screw, 5/8-11 x 6-5/8 in.	1H-A79	2HL-A79	1
80	Fil hd screw, 3/8-16 x 13/16 in.	1H-A80	2HL-A80	1
81	Coolant pipe guard	1H-A81	2HL-A81	1
82	Washer	1H-A82	2HL-A82	2
83	Square hd cup pt screw. 3/8-16 x 1 in.	1H-A83	2HL-A83	2
84	Pulley door	1H-A84a	2HL-A84a	1
	Door handle	1H-A84b	2HL-A84b	1
	Door latch	1H-A84c	2HL-A84c	1
	Pulley door hinge	1H-A84d	2HL-A84d	1
	Hex hd cap screw, 3/8-16 x 1 in.	1H-A84e	2HL-A84e	4
	Washers	1H-A84f	2HL-A84f	4
	Square hd cup pt screw, 1/4-20 x 5/8 in.	1H-A84g	2HL-A84g	1
	Pump clutch plate	1H-A84h	2HL-A84h	1
	Escutcheon pin, #15	1H-A84j	2HL-A84j	4
85	Column vent and name plate (1H plain)	1H-A85a		1
	Column vent and name plate (1H universal)	1H-A85b		1
	Column vent and name plate (2HL plain)		2HL-A85a	1
	Column vent and name plate (2HL universal)		2HL-A85b	1
86	Fil hd screw, 3/8-16 x 13/16 in.	1H-A86	2HL-A86	4
87	Wrought iron nipple, 3/4 x 2 in.	1H-A87	2HL-A87	1
88	Pipe cap, 3/4 in.	1H-A88	2HL-A88	1
89	Column drain cover	1H-A89	2HL-A89	2
90	Flat hd mach screw, 10-32 x 3/8 in.	1H-A90	2HL-A90	4
91	Coolant drain screen	1H-A91	2HL-A91	4
92	Coolant return cover plate	1H-A92	2HL-A92	1
93	Fil hd screw, 3/8-16 x 13/16 in.	1H-A93	2HL-A93	2
94	Acme blue label dowel, 1/2 x 1-1/8 in.	1H-A94	2HL-A94	2
95	Expansion plug, 2-3/8 in.	1H-A95	2HL-A95	6
96	Electric motor	1H-A96	2HL-A96	1
97	Motor door	1H-A97a	2HL-A97a	1
	Motor door hinge	1H-A97b	2HL-A97b	2
	Hex hd cap screw, 3/8-16 x 13/16 in.	1H-A97c	2HL-A97c	8
	Lockwasher	1H-A97d	2HL-A97d	8
	Door latch	1H-A97e	2HL-A97e	1
	Square hd cup pt set screw, 1/4-20 x 5/8 in.	1H-A97f	2HL-A97f	1
	Door handle	1H-A97g	2HL-A97g	1
98	Coolant cleanout gasket	1H-A98	2HL-A98	1
99	Coolant cleanout cover	1H-A99	2HL-A99	1
100	Fil hd screw, 3/8-16 x 13/16 in.	1H-A100	2HL-A100	3
101	Gits oiler, T.C. 409	1H-A101	2HL-A101	1
102	Cutler-Hammer switch	1H-A102	2HL-A102	1
103	Column	1H-A103	2HL-A103	1

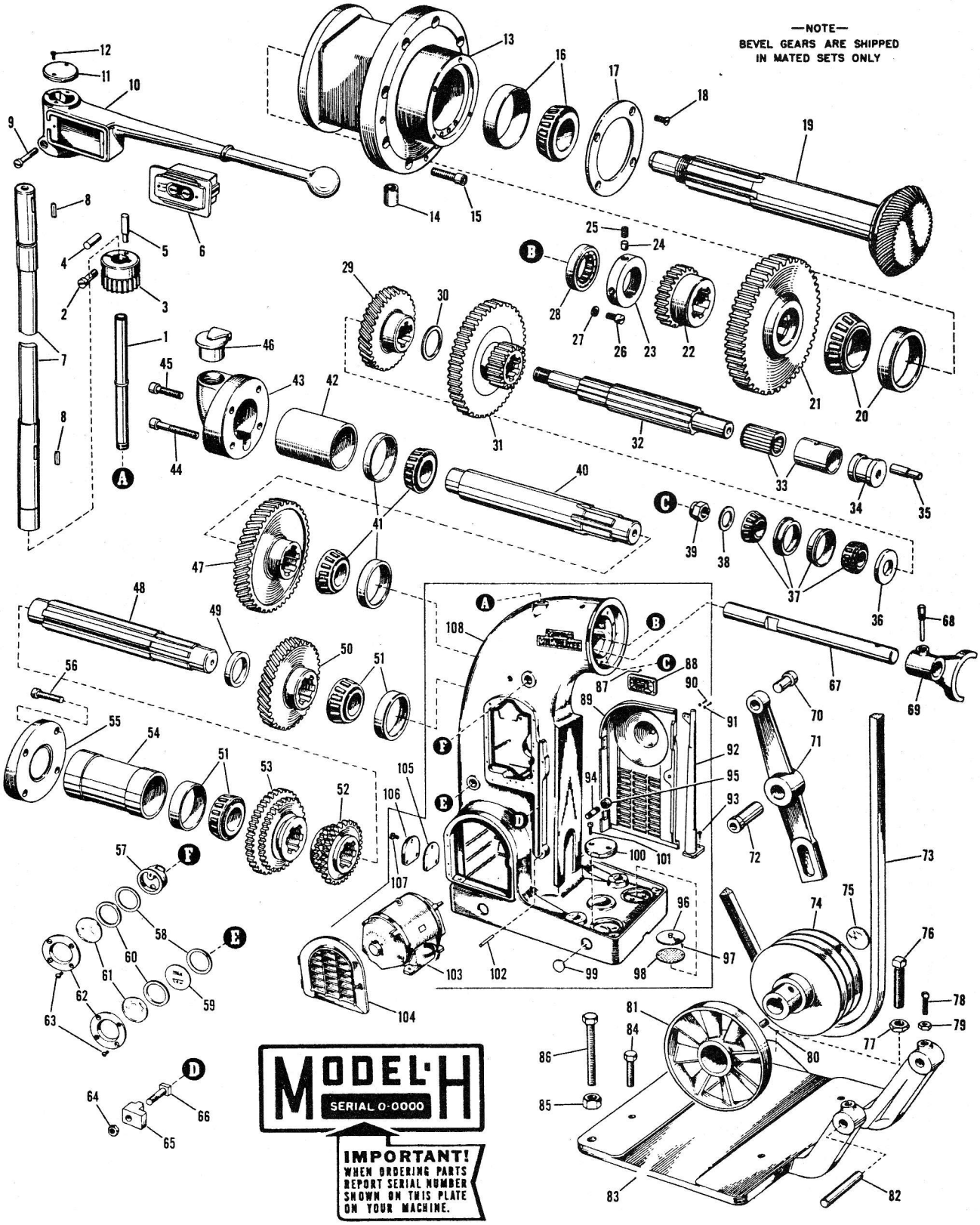

Figure 5. Vertical Column, Speed Drive Train and Motor Mount

Figure 5. Vertical Column, Speed Drive Train and Motor Mount

Item No.	Part Name and Description	Code No. 1H	Code No. 2HL	Qty.
1	Starting lever stand pipe	1H-B1	2HL-B1	1
2	Fil hd screw	1H-B2	2HL-B2	1
3	Starting lever gear	1H-B3	2HL-B3	1
4	Starting lever stop pin	1H-B4	2HL-B4	1
5	Starting lever stop pin	1H-B5	2HL-B5	1
6	Cutler-Hammer switch	1H-B6	2HL-B6	1
7	Starting lever shaft	1H-B7	2HL-B7	1
8	Key	1H-B8	2HL-B8	2
9	Fil hd screw, 7/16-14 x 1-13/16 in.	1H-B9	2HL-B9	1
10	Starting lever	1H-B10	2HL-B10	1
11	Starting lever cover	1H-B11	2HL-B11	1
12	Fil hd screw, 1/4-20 x 1-1/2 in.	1H-B12	2HL-B12	2
13	Spindle drive shaft bearing carrier	1H-B12	2HL-B13	1
14	Overflow pipe	1H-B14	2HL-B14	1
15	Allen hd cap screw, 1/2 x 1-1/2 in.	1H-B15	2HL-B15	8
16	Timken bearing, 3732 - 3775	1H-B16	2HL-B16	1
17	Spindle bearing carrier cover	1H-B17	2HL-B17	1
18	Flat hd mach screw, 1/4-20 x 5/8 in.	1H-B18	2HL-B18	4
19	Spindle drive bevel gear and shaft	1H-B19	2HL-B19	1
20	Timken bearing, 3720 - 3775	1H-B20	2HL-B20	1
21	Spindle drive shaft gear (large)	1H-B21	2HL-B21	1
22	Spindle drive shaft gear (small)	1H-B22	2HL-B22	1
23	Collar nut	1H-B23	2HL-B23	1
24	Collar shoe	1H-B24	2HL-B24	2
25	Hollow hd set screw, 5/16-24 x 5/16 in.	1H-B25	2HL-B25	2
26	Screw, 5/16-18 x 5/8 in.	1H-B26	2HL-B26	2
27	Washer	1H-B27	2HL-B27	2
28	Hyatt bearing, 1305 TS	1H-B28	2HL-B28	1
29	Primary and secondary shaft drive gear	1H-B29	2HL-B29	1
30	Primary shaft bearing thrust washer	1H-B30	2HL-B30	1
31	Spindle drive sliding gear	1H-B31	2HL-B31	1
32	Primary speed change shaft	1H-B32	2HL-B32	1
33	Hyatt bearing, S-93532	1H-B33	2HL-B33	1
34	Primary shaft retainer	1H-B34	2HL-B34	1
35	Bearing adjusting pin	1H-B35	2HL-B35	1
36	Primary shaft drive gear collar	1H-B36	2HL-B36	1
37	Timken bearing, 1328B - 1380	1H-B37	2HL-B37	2
38	Primary shaft washer	1H-B38	2HL-B38	1
39	Elastic stop nut, 42-TE-126	1H-B39	2HL-B39	1
40	Idler shaft	1H-B40	2HL-B40	1
41	Timken bearing, 2820-2879	1H-B41	2HL-B41	2
42	Idler shaft bearing spacer	1H-B42	2HL-B42	1
43	Idler shaft retainer	1H-B43	2HL-B43	1
44	Allen hd cap screw, 7/16 x 2-1/2 in.	1H-B44	2HL-B44	2
45	Allen hd cap screw, 7/16 x 1-3/4 in.	1H-B45	2HL-B45	2
46	Gits oiler, T. C. 409	1H-B46	2HL-B46	1
47	Idler shaft gear	1H-B47	2HL-B47	1
48	Secondary speed change gear shaft	1H-B48	2HL-B48	1
49	Secondary shaft washer	1H-B49	2HL-B49	1
50	Primary and secondary shaft drive gear	1H-B50	2HL-B50	1
51	Timken bearing, 2820 - 2879	1H-B51	2HL-B51	2
52	Front primary sliding gear	1H-B52	2HL-B52	1
53	Rear primary sliding gear	1H-B53	2HL-B53	1
54	Secondary shaft bearing spacer	1H-B54	2HL-B54	1
55	Secondary shaft retainer	1H-B55	2HL-B55	1
56	Allen hd cap screw, 7/16 x 1-1/2 in.	1H-B56	2HL-B56	4
57	Sight oil flow gage	1H-B57	2HL-B57	1
58	Oil gage washer	1H-B58	2HL-B58	2
59	Oil gage plate	1H-B59	2HL-B59	1
60	Oil gage washer	1H-B60	2HL-B60	2
61	Oil gage glass	1H-B61	2HL-B61	2
62	Oil gage plate	1H-B62	2HL-B62	2
63	Fil hd screw, 10-32 x 3/8 in.	1H-B63	2HL-B63	8
64	Nut, 7/16-14	1H-B64	2HL-B64	2
65	Vertical feed trip dog	1H-B65	2HL-B65	2
66	T-bolt, 7/16-14 x 2-1/8 in.	1H-B66	2HL-B66	2
67	Shifter fork rod	1H-B67	2HL-B67	1
68	Hex hd, taper pin screw	1H-B68	2HL-B68	1
69	Range change shifter fork	1H-B69	2HL-B69	1
70	Shifter lever arm button	1H-B70	2HL-B70	1
71	Shifter lever arm	1H-B71	2HL-B71	1
72	Shifter lever arm pin	1H-B72	2HL-B72	1
73	Texrope belt, B-60	1H-B73	2HL-B73	2
74	Motor sheave (for 1750 rpm motor)	1H-B74a	2HL-B74a	1
	Motor sheave (for 1450 rpm motor)	1H-B74b	2HL-B74b	1
75	Expansion plug, 1-1/2 in dia	1H-B75	2HL-B75	1
76	Square hd screw, 5/8-11 x 2-3/4 in.	1H-B76	2HL-B76	1
77	Nut, 5/8-11	1H-B77	2HL-B77	1
78	Square hd cup pt set screw, 3/8 x 1-1/4 in.	1H-B78	2HL-B78	2
79	Nut, 3/8-16	1H-B79	2HL-B79	2
80	Flat pt Allen hd set screw, 3/8-16 x 3/4 in.	1H-B80	2HL-B80	2
81	Motor fan	1H-B81	2HL-B81	1
82	Motor base hinge pin	1H-B82	2HL-B82	2
83	Motor base	1H-B83	2HL-B83	1
84	Motor hold-down screws	1H-B84	2HL-B84	4
85	Nut, 5/8-11	1H-B85	2HL-B85	1
86	Hex hd screw, 5/8-11 x 6-5/8 in.	1H-B86	2HL-B86	1
87	Fil hd screw, 3/8-16 x 13/16 in.	1H-B87	2HL-B87	4
88	Column vent and name plate (1H)	1H-B88		1
	Column vent and name plate (2HL)		2HL-B88	1
89	Pulley door	1H-B89a	2HL-B89a	1
	Door handle	1H-B89b	2HL-B89b	1
	Door latch	1H-B89c	2HL-B89c	1
	Pulley door hinge	1H-B89d	2HL-B89d	1
	Hex hd cap screw, 3/8-16 x 1 in.	1H-B89e	2HL-B89e	4
	Washers	1H-B89f	2HL-B89f	4
	Square hd cup pt screw, 1/4-20 x 5/8 in.	1H-B89g	2HL-B89g	1
	Pump clutch plate	1H-B89h	2HL-B89h	1
	Escutcheon pin, #15	1H-B89j	2HL-B89j	4
90	Hex hd cap screw, 3/8-16 x 1 in.	1H-B90	2HL-B90	2
91	Washer	1H-B91	2HL-B91	2
92	Coolant pipe guard	1H-B92	2HL-B92	1
93	Fil hd screw, 1/2-13 x 1-3/4 in.	1H-B93	2HL-B93	1
94	Wrought iron nipple, 3/4 x 2 in.	1H-B94	2HL-B94	1
95	Pipe cap, 3/4 in.	1H-B95	2HL-B95	1
96	Column drain cover	1H-B96	2HL-B96	2
97	Flat hd mach screw, 10-32 x 3/8 in.	1H-B97	2HL-B97	4
98	Coolant drain screens	1H-B98	2HL-B98	4
99	Expansion plug, 2-3/8 in.	1H-B99	2HL-B99	6
100	Coolant return cover plate	1H-B100	2HL-B100	1
101	Fil hd screw, 3/8-16 x 13/16 in.	1H-B101	2HL-B101	2
102	Acme blue label dowel, 1/2 x 1-1/8 in.	1H-B102	2HL-B102	2
103	Electric motor	1H-B103	2HL-B103	1
104	Motor door	1H-B104a	2HL-B104a	1
	Motor door hinge	1H-B104b	2HL-B104b	2
	Hex hd cap screw, 3/8-16 x 13/16 in.	1H-B104c	2HL-B104c	8
	Lockwasher	1H-B104d	2HL-B104d	8
	Door latch	1H-B104e	2HL-B104e	1
	Square hd cup pt set screw, 1/4-20 x 5/8 in.	1H-B104f	2HL-B104f	1
	Door handle	1H-B104g	2HL-B104g	1
105	Coolant cleanout gasket	1H-B105	2HL-B105	1
106	Cooland cleanout cover	1H-B106	2HL-B106	1
107	Fil hd screw, 3/8-16 x 13/16 in.	1H-B107	2HL-B107	3
108	Column	1H-B108	2HL-B108	1

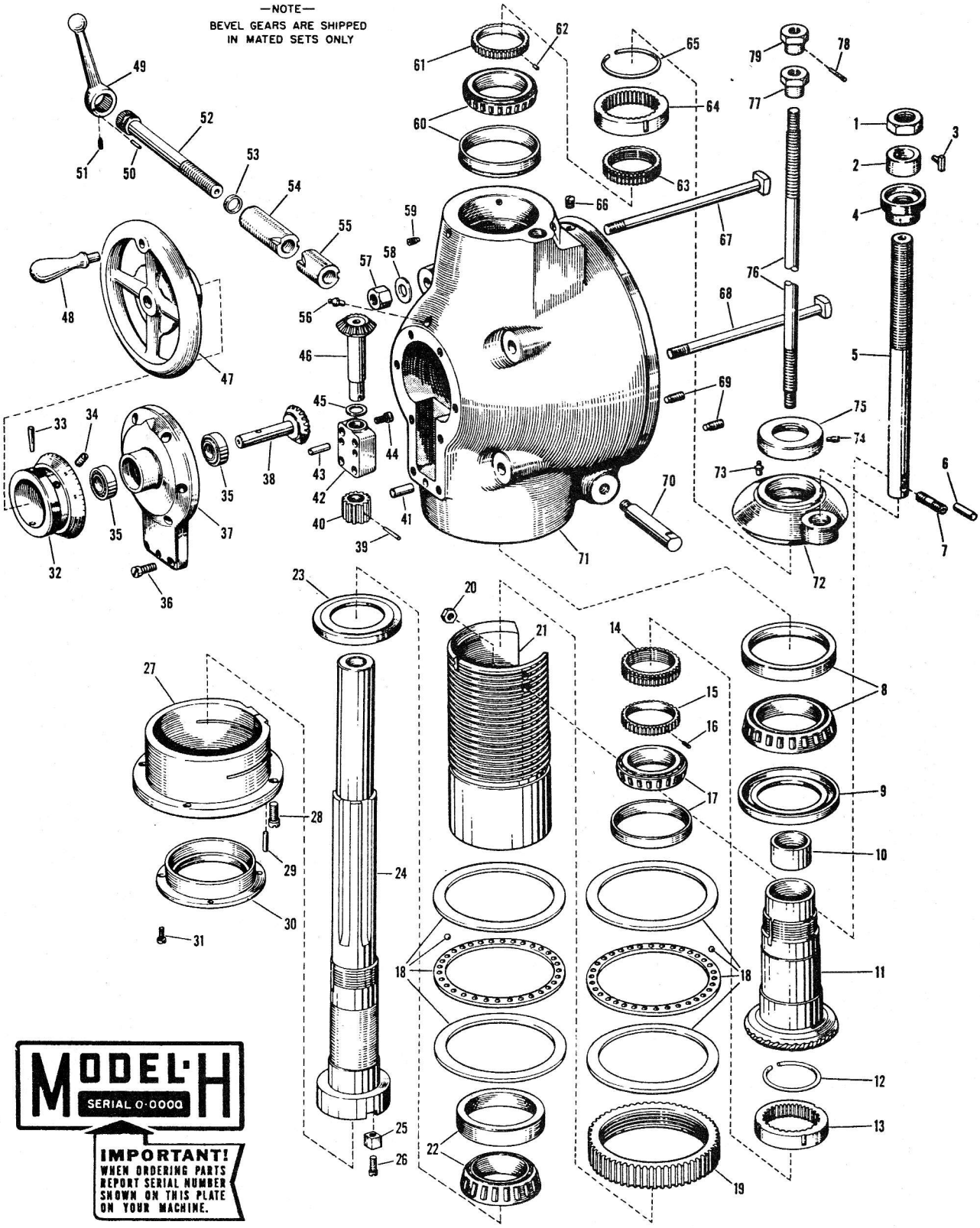

Figure 6. Swivel Head and Spindle

Figure 6. Swivel Head and Spindle

Item No.	Part Name and Description	Code No. 1H	Code No. 2HL	Qty.
1	Positive stop check nut	1H-C1	2HL-C1	1
2	Graduated collar spacer	1H-C2	2HL-C2	1
3	Key	1H-C3	2HL-C3	1
4	Positive stop graduated collar	1H-C4	2HL-C4	1
5	Positive stop rod	1H-C5	2HL-C5	1
6	Acme blue label dowel, 3/8 x 1/4 in.	1H-C6	2HL-C6	1
7	Positive stop rod stud, 1/2-20 x 1-15/16 in.	1H-C7	2HL-C7	1
8	Timken bearing, 34300-34478	1H-C8	2HL-C8	1
9	Grease retaining and fitting washer	1H-C9	2HL-C9	1
10	Spindle bushing	1H-C10	2HL-C10	1
11	Spindle bevel gear (driven)	1H-C11	2HL-C11	1
12	Snap ring	1H-C12	2HL-C12	1
13	Spindle nut sleeve	1H-C13	2HL-C13	1
14	Spindle nut	1H-C14	2HL-C14	1
15	Spindle nut ring	1H-C15	2HL-C15	1
16	Pin, 1/4 x 3/8 in.	1H-C16	2HL-C16	2
17	Timken bearing, 39412-39250	1H-C17	2HL-C17	1
18	Joy bearing, 1142T	1H-C18	2HL-C18	2
19	Quill elevating nut	1H-C19	2HL-C19	1
20	Elastic stop nut, 29E-080	1H-C20	2HL-C20	1
21	Quill	1H-C21	2HL-C21	1
22	Timken bearing, 3920-3984	1H-C22	2HL-C22	1
23	Grease shield (lower)	1H-C23	2HL-C23	1
24	Spindle	1H-C24	2HL-C24	1
25	Spindle drive key	1H-C25	2HL-C25	2
26	Fil hd screw	1H-C26	2HL-C26	2
27	Quill clamp collar	1H-C27	2HL-C27	1
28	Fil hd screw	1H-C28	2HL-C28	4
29	Acme blue label dowel, 3/8 x 1 in.	1H-C29	2HL-C29	1
30	Spindle oil shield	1H-C30	2HL-C30	1
31	Fil hd screw	1H-C31	2HL-C31	4
32	Quill elevating dial	1H-C32	2HL-C32	1
33	Taper pin, #4 x 1-1/2 in.	1H-C33	2HL-C33	1
34	Set screw, 3/8-16 x 1/2 in.	1H-C34	2HL-C34	1
35	New Departure bearing, 88503	1H-C35	2HL-C35	2
36	Fil hd screw, 3/8-16 x 13/16 in.	1H-C36	2HL-C36	8
37	Swivel head cover	1H-C37	2HL-C37	1
38	Bevel gear (driver)	1H-C38	2HL-C38	1
39	Taper pin, #3 x 1 in.	1H-C39	2HL-C39	1
40	Quill elevating pinion	1H-C40	2HL-C40	1
41	Acme blue label dowel, 3/8 x 1-1/4 in.	1H-C41	2HL-C41	2
42	Bevel gear bracket	1H-C42	2HL-C42	1
43	Acme blue label dowel, 5/16 x 1-1/2 in.	1H-C43	2HL-C43	2
44	Fil hd screw, 3/8-16 x 1-1/8 in.	1H-C44	2HL-C44	4
45	Bevel gear fitting washer	1H-C45	2HL-C45	1
46	Bevel gear (driven)	1H-C46	2HL-C46	1
47	Handwheel	1H-C47	2HL-C47	1
48	Rockwood handle, 4QA	1H-C48	2HL-C48	1
49	Quill clamp handle	1H-C49	2HL-C49	1
50	Pin, 5/32 x 9/16 in.	1H-C50	2HL-C50	1
51	Allen dog pt set screw, 1/4 x 5/16 in.	1H-C51	2HL-C51	1
52	Quill clamp shaft	1H-C52	2HL-C52	1
53	Thrust washer	1H-C53	2HL-C53	1
54	Quill lock sleeve (long)	1H-C54	2HL-C54	1
55	Quill lock sleeve (short)	1H-C55	2HL-C55	1
56	Alemite zerk fitting, 1/8 in.	1H-C56	2HL-C56	1
57	Hex nut, 5/8 in.	1H-C57	2HL-C57	4
58	Finished washer	1H-C58	2HL-C58	4
59	Set screw, 3/8-16 x 15/16 in.	1H-C59	2HL-C59	3
60	Timken bearing, 394A-399A	1H-C60	2HL-C60	1
61	Spindle nut ring	1H-C61	2HL-C61	1
62	Pin, 1/4 x 1/4 in.	1H-C62	2HL-C62	1
63	Spindle nut	1H-C63	2HL-C63	1
64	Spindle nut sleeve	1H-C64	2HL-C64	1
65	Snap ring	1H-C65	2HL-C65	1
66	Set screw, 5/8-11 x 5/8 in.	1H-C66	2HL-C66	1
67	Swivel head T-bolt, 5/8-11 x 9-7/32 in.	1H-C67	2HL-C67	2
68	Swivel head T-bolt, 5/8-11 x 9-23/32 in.	1H-C68	2HL-C68	2
69	Headless dog pt set screw, 7/16-14 x 7/8 in.	1H-C69	2HL-C69	2
70	Clamp rod	1H-C70	2HL-C70	1
71	Swivel head	1H-C71	2HL-C71	1
72	Swivel head cap (single stop)	1H-C72	2HL-C72	1
73	Alemite zerk fitting, 1/8 in.	1H-C73	2HL-C73	1
74	Set screw	1H-C74	2HL-C74	1
75	Head cap cover	1H-C75	2HL-C75	1
76	Draw-in bolt	1H-C76	2HL-C76	1
77	Draw bolt nut	1H-C77	2HL-C77	1
78	Taper pin, #2 x 1 in.	1H-C78	2HL-C78	1
79	Draw bolt head	1H-C79	2HL-C79	1

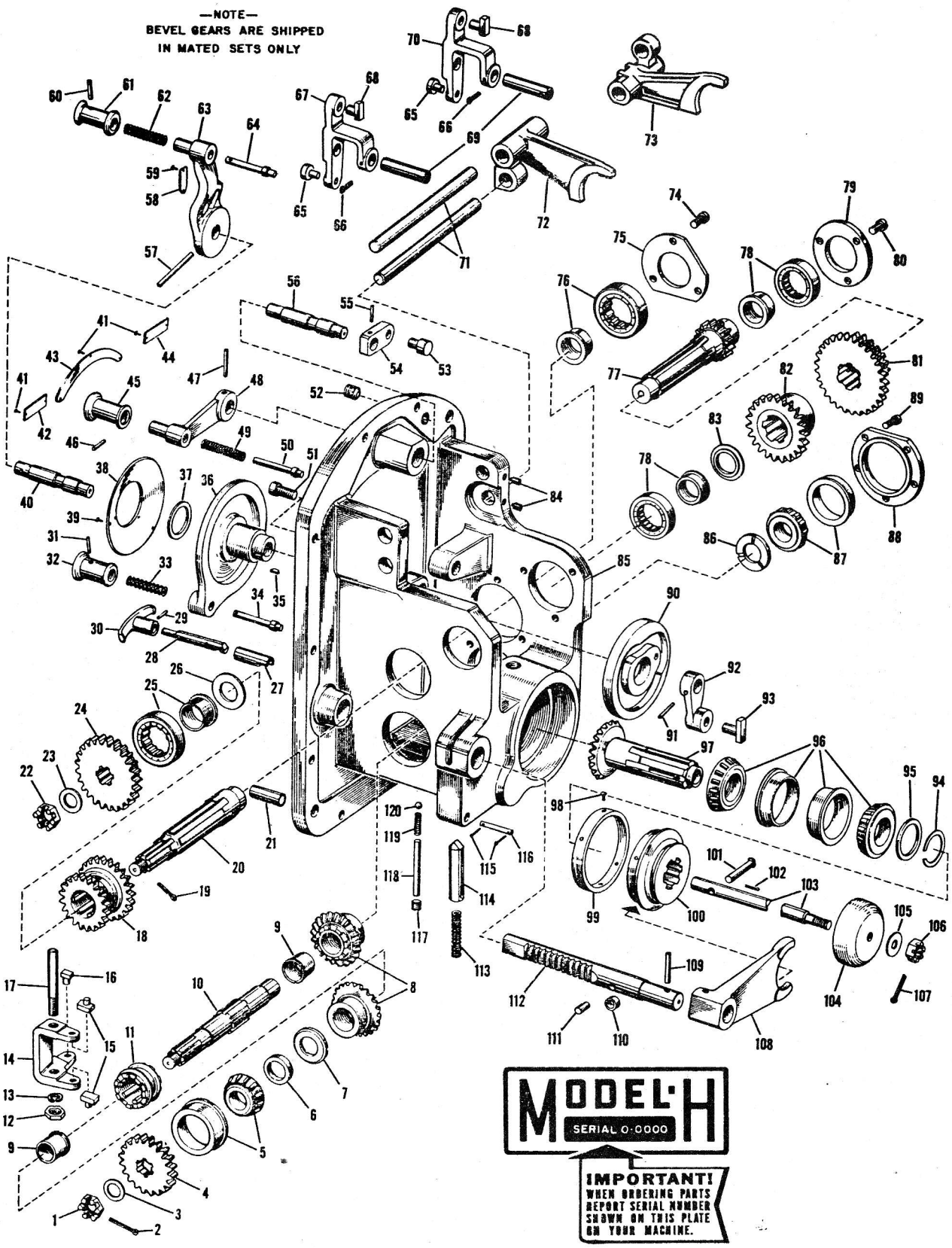

Figure 7. Speed Gear Box

Figure 7. Speed Gear Box

Item No.	Part Name and Description	Code No. 1H	Code No. 2HL	Qty.
1	Hex nut, 5/8-11	1H-D1	2HL-D1	1
2	Cotter pin, 7/64 x 1-1/2 in.	1H-D2	2HL-D2	1
3	Washer	1H-D3	2HL-D3	1
4	Range gear	1H-D4	2HL-D4	1
5	Timken bearing, 1729B-1755	1H-D5	2HL-D5	1
6	Bevel gear space washer	1H-D6	2HL-D6	1
7	Reverse bevel gear thrust washer	1H-D7	2HL-D7	1
8	Spindle reverse bevel gear	1H-D8	2HL-D8	2
9	Spindle reverse bevel gear bushing	1H-D9	2HL-D9	2
10	Reverse bevel gear shaft	1H-D10	2HL-D10	1
11	Spindle reverse clutch	1H-D11	2HL-D11	1
12	Nut, 1/2-13	1H-D12	2HL-D12	1
13	Lockwasher	1H-D13	2HL-D13	1
14	Spindle reverse shifter yoke	1H-D14	2HL-D14	1
15	Reverse yoke shoe	1H-D15	2HL-D15	2
16	Reverse rod shoe	1H-D16	2HL-D16	1
17	Spindle reverse yoke stud	1H-D17	2HL-D17	1
18	Secondary speed change gear	1H-D18	2HL-D18	1
19	Cotter pin, 7/64 x 1-1/2 in.	1H-D19	2HL-D19	1
20	Secondary speed change shaft	1H-D20	2HL-D20	1
21	Acme blue label dowel, 1/2 x 1-1/2 in.	1H-D21	2HL-D21	2
22	Hex nut, 5/8-11	1H-D22	2HL-D22	1
23	Washer	1H-D23	2HL-D23	1
24	Range gear	1H-D24	2HL-D24	1
25	Hyatt bearing, A-1206-TS	1H-D25	2HL-D25	1
26	Secondary shaft collar	1H-D26	2HL-D26	1
27	Oil retainer tube	1H-D27	2HL-D27	1
28	Spindle reverse rod	1H-D28	2HL-D28	1
29	Taper pin, #3 x 7/8 in.	1H-D29	2HL-D29	1
30	Spindle reverse knob	1H-D30	2HL-D30	1
31	Taper pin, #2 x 7/8 in.	1H-D31	2HL-D31	1
32	Speed selection knob	1H-D32	2HL-D32	1
33	Spring	1H-D33	2HL-D33	1
34	Speed selection lever plunger	1H-D34	2HL-D34	1
35	Hi-Pro key, HP404	1H-D35	2HL-D35	1
36	Speed change lever and dial plate	1H-D36	2HL-D36	1
37	Washer	1H-D37	2HL-D37	1
38	Speed selection dial	1H-D38	2HL-D38	1
39	Escutcheon pin, #15	1H-D39	2HL-D39	8
40	Range change lever shaft	1H-D40	2HL-D40	1
41	Escutcheon pin, #15	1H-D41	2HL-D41	7
42	Speed plate (fast)	1H-D42	2HL-D42	1
43	Instruction plate	1H-D43	2HL-D43	1
44	Speed plate (slow)	1H-D44	2HL-D44	1
45	Speed selection knob	1H-D45	2HL-D45	1
46	Taper pin, #2 x 7/8 in.	1H-D46	2HL-D46	1
47	Taper pin, #3 x 1-3/8 in.	1H-D47	2HL-D47	1
48	Range change lever	1H-D48	2HL-D48	1
49	Spring	1H-D49	2HL-D49	1
50	Speed selection lever plunger	1H-D50	2HL-D50	1
51	Allen hd cap screw, 3/8 x 1 in.	1H-D51	2HL-D51	11
52	Cup pt allen hd set screw, 1/2 x 3/4 in.	1H-D52	2HL-D52	2
53	Range change crank pin	1H-D53	2HL-D53	1
54	Range change crank	1H-D54	2HL-D54	1
55	Taper pin, #3 x 1 in.	1H-D55	2HL-D55	1
56	Range change lever shaft	1H-D56	2HL-D56	1
57	Taper pin, #3 x 2-1/4 in.	1H-D57	2HL-D57	1
58	Speed dial pointer	1H-D58	2HL-D58	1
59	Escutcheon pin, #15	1H-D59	2HL-D59	2
60	Taper pin, #2 x 7/8 in.	1H-D60	2HL-D60	1

Item No.	Part Name and Description	Code No. 1H	Code No. 2HL	Qty.
61	Speed selection knob	1H-D61	2HL-D61	1
62	Spring	1H-D62	2HL-D62	1
63	Secondary speed change lever	1H-D63	2HL-D63	1
64	Speed selection lever plunger	1H-D64	2HL-D64	1
65	Primary change lever pin	1H-D65	2HL-D65	2
66	Cotter pin, 7/64 x 1-1/2 in.	1H-D66	2HL-D66	2
67	Front primary change lever	1H-D67	2HL-D67	1
68	Rapid traverse clutch cone shoe	1H-D68	2HL-D68	2
69	Primary change lever shaft	1H-D69	2HL-D69	2
70	Rear primary change lever	1H-D70	2HL-D70	1
71	Shifter fork guide rod	1H-D71	2HL-D71	2
72	Front primary shifter fork	1H-D72	2HL-D72	1
73	Rear primary shifter fork	1H-D73	2HL-D73	1
74	Screw, 5/16-18 x 7/8 in.	1H-D74	2HL-D74	3
75	Secondary shaft bearing retainer	1H-D75	2HL-D75	1
76	Hyatt bearing, R-1305-YS	1H-D76	2HL-D76	1
77	Idler shaft and rear gear	1H-D77	2HL-D77	1
78	Hyatt bearing, R-1205-YS	1H-D78	2HL-D78	2
79	Idler shaft bearing retainer	1H-D79	2HL-D79	1
80	Screw, 5/16-18 x 7/8 in.	1H-D80	2HL-D80	3
81	Center idler cluster	1H-D81	2HL-D81	1
82	Front idler gear	1H-D82	2HL-D82	1
83	Idler shaft collar	1H-D83	2HL-D83	1
84	Dog pt set screw, 1/4-20 x 15/32 in.	1H-D84	2HL-D84	2
85	Speed box	1H-D85	2HL-D85	1
86	Reverse bevel gear thrust washer	1H-D86	2HL-D86	1
87	Timken bearing, 1729B-1755	1H-D87	2HL-D87	1
88	Reverse bevel shaft bearing carrier	1H-D88	2HL-D88	1
89	Screw, 5/16-18 x 7/8 in.	1H-D89	2HL-D89	5
90	Speed change cam	1H-D90	2HL-D90	1
91	Taper pin, #3 x 1-3/8 in.	1H-D91	2HL-D91	1
92	Secondary speed change crank	1H-D92	2HL-D92	1
93	Crank shoe	1H-D93	2HL-D93	1
94	Snap ring	1H-D94	2HL-D94	1
95	Drive bevel bearing collar	1H-D95	2HL-D95	1
96	Timken bearing, 19283B-19138	1H-D96	2HL-D96	2
97	Spindle drive bevel gear	1H-D97	2HL-D97	1
98	Copper rivet	1H-D98	2HL-D98	7
99	Brake cone	1H-D99	2HL-D99	1
100	Clutch shifter spool	1H-D100	2HL-D100	1
101	Clutch shifter spool pin	1H-D101	2HL-D101	1
102	Cotter pin, 1/16 x 5/8 in.	1H-D102	2HL-D102	1
103	Clutch shifter rod	1H-D103	2HL-D103	1
104	Clutch cone	1H-D104	2HL-D104	1
105	Washer	1H-D105	2HL-D105	1
106	Nut, 1/2-13	1H-D106	2HL-D106	1
107	Cotter pin, 7/64 x 1-1/2 in.	1H-D107	2HL-D107	1
108	Clutch shifter fork	1H-D108	2HL-D108	1
109	Taper pin, #4 x 1-3/8 in.	1H-D109	2HL-D109	1
110	Detent roller	1H-D110	2HL-D110	1
111	Detent roller pin	1H-D111	2HL-D111	1
112	Clutch shifter yoke rod	1H-D112	2HL-D112	1
113	Spring	1H-D113	2HL-D113	1
114	Detent plunger	1H-D114	2HL-D114	1
115	Cotter pin, 1/16 x 5/8 in.	1H-D115	2HL-D115	2
116	Detent plunger pin	1H-D116	2HL-D116	1
117	Screw, 3/8-16 x 3/8 in.	1H-D117	2HL-D117	1
118	Pin	1H-D118	2HL-D118	1
119	Spring	1H-D119	2HL-D119	1
120	Steel ball, 5/16 in.	1H-D120	2HL-D120	1

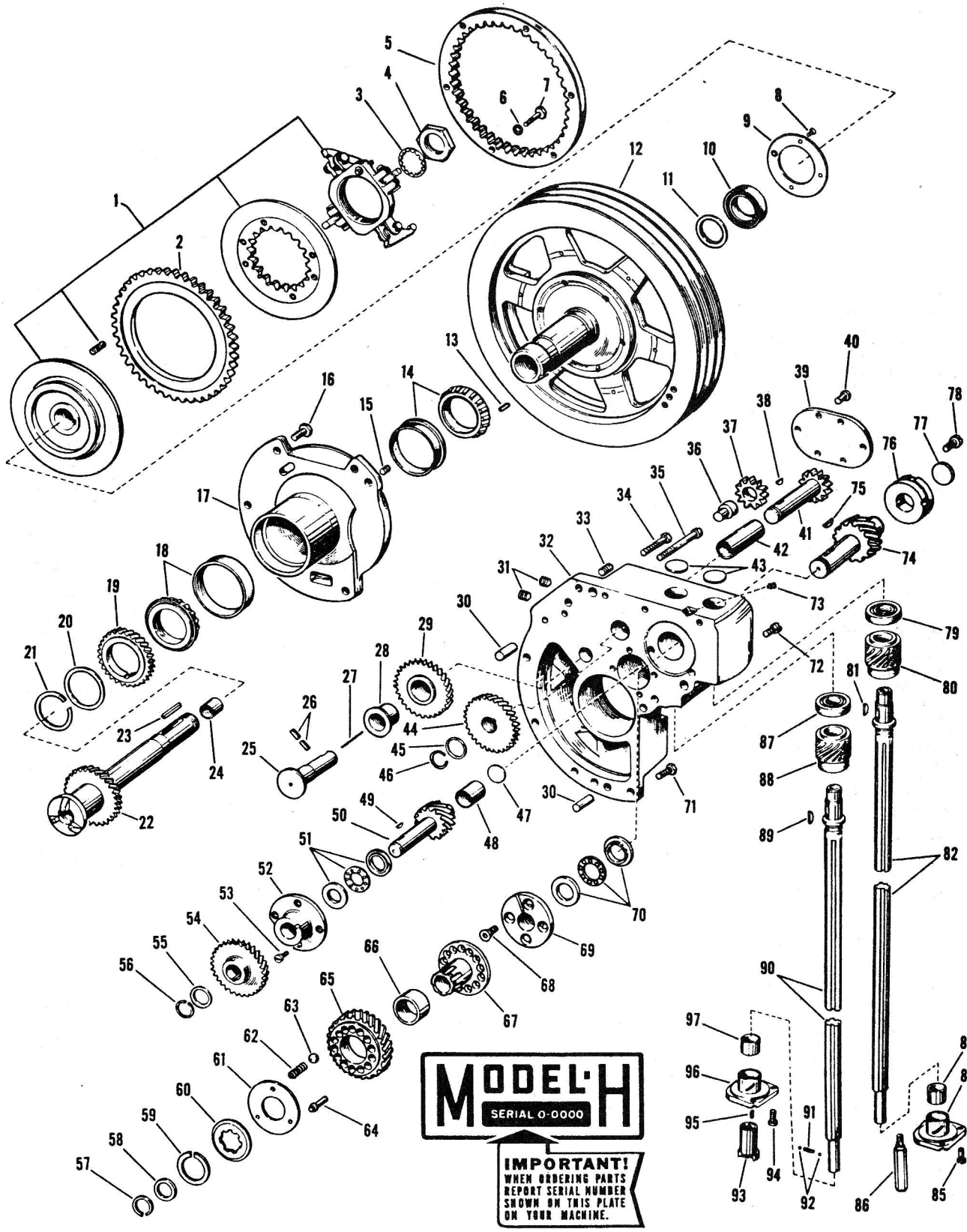

Figure 8. Pulley Bracket and Feed and Rapid Traverse Take-off Bracket

Figure 8. Pulley Bracket and Feed and Rapid Traverse Take-off Bracket

Item No.	Part Name and Description	Code No. 1H	Code No. 2HL	Qty.
1	Special C-6-1/2 in. twin disc clutch, #5773	1H-E1	2HL-E1	1
2	Clutch drive plate gear, 42 teeth, for clutch #5773	1H-E2	2HL-E2	1
3	Shakeproof lock washer, #1238	1H-E3	2HL-E3	1
4	Nut, 1-1/8-16	1H-E4	2HL-E4	1
5	Clutch gear ring	1H-E5	2HL-E5	1
6	Lock washer, 5/16 in.	1H-E6	2HL-E6	6
7	Hex hd cap screw, 5/16-18 x 1-9/16 in.	1H-E7	2HL-E7	6
8	Fil hd screw, #10-32 x 15/32 in.	1H-E8	2HL-E8	4
9	Ball bearing retainer	1H-E9	2HL-E9	1
10	New departure bearing, 1206	1H-E10	2HL-E10	1
11	Feed drive sleeve bearing spacer	1H-E11	2HL-E11	1
12	Pulley	1H-E12	2HL-E12	1
13	Key	1H-E13	2HL-E13	1
14	Timken bearing, 18200-18337	1H-E14	2HL-E14	1
15	Soc hd flat pt set screw, 3/8 x 1/2 in.	1H-E15	2HL-E15	2
16	Hex hd cap screw, 3/8-16 x 1-5/16 in.	1H-E16	2HL-E16	5
17	Pulley bracket	1H-E17	2HL-E17	1
18	Timken bearing, 13181-13318	1H-E18	2HL-E18	1
19	Rapid traverse drive gear	1H-E19	2HL-E19	1
20	Pulley fitting washer	1H-E20	2HL-E20	1
21	Snap ring	1H-E21	2HL-E21	1
22	Feed drive sleeve gear	1H-E22	2HL-E22	1
23	Key	1H-E23	2HL-E23	1
24	Clutch shifter rod bushing	1H-E24	2HL-E24	1
25	Rapid traverse idler gear stud	1H-E25	2HL-E25	1
26	Flat pt set screw, 3/8 x 5/8 in.	1H-E26	2HL-E26	2
27	Oil wicking	1H-E27	2HL-E27	1
28	Rapid traverse idler gear bushing	1H-E28	2HL-E28	1
29	Rapid traverse drive idler gear	1H-E29	2HL-E29	1
30	Acme blue label dowel, 1/2 x 1-1/4 in.	1H-E30	2HL-E30	2
31	Allen hd pipe plug, 1/4 in.	1H-E31	2HL-E31	2
32	Feed and rapid traverse take-off bracket	1H-E32	2HL-E32	1
33	Allen set screw, 1/2 x 3/4 in.	1H-E33	2HL-E33	2
34	Hex hd cap screw, 3/8-16 x 2-3/16 in.	1H-E34	2HL-E34	1
35	Fil hd screw, 3/8-16 x 3-7/16 in.	1H-E35	2HL-E35	3
36	Oil pump gear stud	1H-E36	2HL-E36	1
37	Oil pump gear (driven)	1H-E37	2HL-E37	1
38	Hi-Pro key, HP-606	1H-E38	2HL-E38	1
39	Oil pump cover	1H-E39	2HL-E39	1
40	Fil hd screw, 5/16-18 x 7/8 in.	1H-E40	2HL-E40	6
41	Oil pump gear (driver)	1H-E41	2HL-E41	1
42	Bushing	1H-E42	2HL-E42	1
43	Expansion plug, 1-1/8 in.	1H-E43	2HL-E43	2
44	Pump drive gear	1H-E44	2HL-E44	1
45	Fitting collar	1H-E45	2HL-E45	1
46	Snap ring	1H-E46	2HL-E46	1
47	Expansion plug, 15/16 in.	1H-E47	2HL-E47	1
48	Feed drive worm bushing	1H-E48	2HL-E48	1
49	Hi-Pro key, HP-606	1H-E49	2HL-E49	1
50	Feed drive worm	1H-E50	2HL-E50	1
51	Kearney & Trecker thrust bearing, 4723	1H-E51	2HL-E51	1
52	Feed drive worm bearing (inner)	1H-E52	2HL-E52	1
53	Fil hd screw, 5/16-18 x 7/8 in.	1H-E53	2HL-E53	4
54	Feed worm drive gear	1H-E54	2HL-E54	1
55	Fitting collar	1H-E55	2HL-E55	1
56	Snap ring	1H-E56	2HL-E56	1
57	Snap ring	1H-E57	2HL-E57	1
58	Fitting collar	1H-E58	2HL-E58	1
59	Snap ring	1H-E59	2HL-E59	1
60	Rapid traverse slip clutch plate	1H-E60	2HL-E60	1
61	Rapid traverse slip clutch friction plate	1H-E61	2HL-E61	1
62	Spring	1H-E62	2HL-E62	18
63	Steel ball, 5/16 in.	1H-E63	2HL-E63	18
64	Friction drive plate pin	1H-E64	2HL-E64	3
65	Rapid traverse worm drive gear	1H-E65	2HL-E65	1
66	Rapid traverse slip clutch bushing	1H-E66	2HL-E66	1
67	Rapid traverse slip clutch sleeve	1H-E67	2HL-E67	1
68	Hex soc flat hd cap screw, 5/16-18 x 7/8 in.	1H-E68	2HL-E68	4
69	Rapid traverse drive worm bearing (inner)	1H-E69	2HL-E69	1
70	Kearney & Trecker thrust bearing 4723	1H-E70	2HL-E70	1
71	Hex hd cap screw, 3/8-16 x 1-15/16 in.	1H-E71	2HL-E71	4
72	Fil hd screw, 3/8-16 x 1-1/16 in.	1H-E72	2HL-E72	2
73	Allen set screw, 5/16 x 5/16 in.	1H-E73	2HL-E73	1
74	Rapid traverse drive worm	1H-E74	2HL-E74	1
75	Hi-Pro key, HP-606	1H-E75	2HL-E75	1
76	Rapid traverse drive worm bearing (outer)	1H-E76	2HL-E76	1
77	Expansion plug, 1-1/16 in.	1H-E77	2HL-E77	1
78	Fil hd screw, 5/16-18 x 3/4 in.	1H-E78	2HL-E78	3
79	New Departure bearing, 1204	1H-E79	2HL-E79	1
80	Feed and rapid traverse drive worm wheel	1H-E80	2HL-E80	1
81	Hi-Pro key, HP-705	1H-E81	2HL-E81	1
82	Rapid traverse take-off shaft	1H-E82	2HL-E82	1
83	Oilite bearing, A-1008-4	1H-E83	2HL-E83	1
84	Feed and rapid traverse drive shaft retainer	1H-E84	2HL-E84	1
85	Fil hd screw, 5/16-18 x 7/8 in.	1H-E85	2HL-E85	2
86	Positive stop screw, 5/16-18 x 2-1/16 in. (for horiz. machine)	1H-E86	2HL-E86	1
87	New Departure bearing, 1204	1H-E87	2HL-E87	1
88	Feed and rapid traverse drive worm wheel	1H-E88	2HL-E88	1
89	Hi-Pro key, HP-705	1H-E89	2HL-E89	1
90	Feed drive take-off shaft	1H-E90	2HL-E90	1
91	Spring	1H-E91	2HL-E91	1
92	Steel ball, 3/16 in.	1H-E92	2HL-E92	2
93	Coolant shaft drive clutch	1H-E93	2HL-E93	1
94	Fil hd screw, 5/16-18 x 7/8 in.	1H-E94	2HL-E94	2
95	Key	1H-E95	2HL-E95	1
96	Feed and rapid traverse drive shaft retainer	1H-E96	2HL-E96	1
97	Oilite bearing, A-1008-4	1H-E97	2HL-E97	1

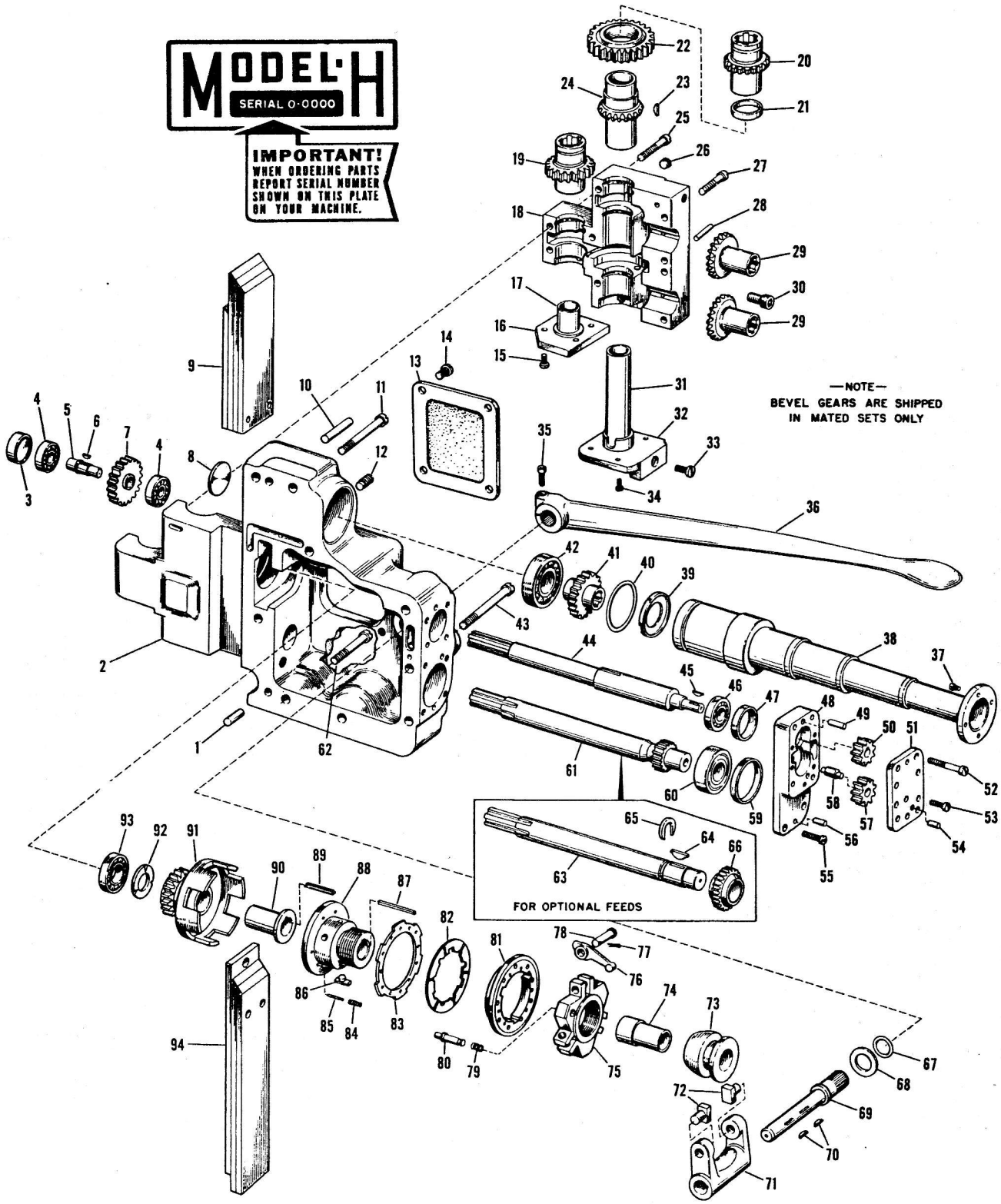

Figure 9. Feed and Rapid Traverse Drive Bracket

Figure 9. Feed and Rapid Traverse Drive Bracket

Item No.	Part Name and Description	Code No. 1H	2HL	Qty.
1	Acme blue label dowel, 5/16 x 2 in.	1H-F1	2HL-F1	1
2	Feed and rapid traverse drive bracket	1H-F2	2HL-F2	1
3	Rapid traverse idler gear fitting washer	1H-F3	2HL-F3	1
4	New Departure bearing, 3201	1H-F4	2HL-F4	2
5	Rapid traverse idler gear stud	1H-F5	2HL-F5	1
6	Hi-Pro key, HP-403	1H-F6	2HL-F6	1
7	Rapid traverse idler gear	1H-F7	2HL-F7	1
8	Expansion plug, 1-3/8 in.	1H-F8	2HL-F8	1
9	Drive shaft guard assembly (upper) including pins and screws	1H-F9		1
10	Acme blue label dowel, 5/16 x 2-3/4 in.	1H-F10	2HL-F10	1
11	Fil hd screw, 3/8-16 x 3 in.	1H-F11	2HL-F11	6
12	Dog pt set screw, 3/8-16 x 11/16 in.	1H-F12	2HL-F12	1
13	Rapid traverse clutch cover	1H-F13	2HL-F13	1
14	Fil hd screw, 5/16-18 x 27/32 in.	1H-F14	2HL-F14	4
15	Fil hd screw, 1/4-20 x 5/8 in.	1H-F15	2HL-F15	4
16	Feed drive oil retainer plate	1H-F16	2HL-F16	1
17	Feed drive oil retainer tube	1H-F17	2HL-F17	1
18	Feed and rapid traverse drive bracket cap	1H-F18	2HL-F18	1
19	Feed drive gear	1H-F19	2HL-F19	1
20	Rapid traverse drive bevel gear	1H-F20	2HL-F20	1
21	Rapid traverse drive bevel gear collar	1H-F21	2HL-F21	1
22	Feed drive spur gear	1H-F22	2HL-F22	1
23	Hi-Pro key, HP-505	1H-F23	2HL-F23	1
24	Feed drive bevel gear	1H-F24	2HL-F24	1
25	Fil hd screw, 5/16-18 x 2 in.	1H-F25	2HL-F25	5
26	Plug, 1/8 in. pipe thread	1H-F26	2HL-F26	3
27	Fil hd screw, 5/16-18 x 1-3/4 in.	1H-F27	2HL-F27	1
28	Acme blue label dowel, 5/16 x 1-1/4 in.	1H-F28	2HL-F28	1
29	Feed and rapid traverse bevel gear	1H-F29	2HL-F29	2
30	Soc hd cap screw, 3/8 x 3/4 in.	1H-F30	2HL-F30	2
31	Rapid traverse drive oil retainer tube	1H-F31	2HL-F31	1
32	Rapid traverse drive oil retaining plate	1H-F32	2HL-F32	1
33	Fil hd screw, 5/16-18 x 45/64 in.	1H-F33	2HL-F33	1
34	Fil hd screw, 1/4-20 x 13/16 in.	1H-F34	2HL-F34	4
35	Allen hd screw, 1/4 x 1 in.	1H-F35	2HL-F35	1
36	Rapid traverse lever	1H-F36	2HL-F36	1
37	Fil hd screw, #10-32 x 1/2 in.	1H-F37	2HL-F37	4
38	Telescopic tube assembly (rear)	1H-F38	2HL-F38	1
39	Retainer bushing	1H-F39	2HL-F39	1
40	Rubber "O" ring	1H-F40	2HL-F40	1
41	Table drive rapid traverse gear	1H-F41	2HL-F41	1
42	New Departure bearing, 3205	1H-F42	2HL-F42	1
43	Fil hd screw, 3/8-16 x 3-13/16 in.	1H-F43	2HL-F43	1
44	Rapid traverse clutch shaft	1H-F44	2HL-F44	1
45	Hi-Pro key, HP-404	1H-F45	2HL-F45	1
46	New Departure bearing 3202	1H-F46	2HL-F46	1
47	Rapid traverse clutch shaft fitting washer	1H-F47	2HL-F47	1
48	Oil pump body	1H-F48	2HL-F48	1
49	Acme blue label dowel, 1/4 x 1-5/16 in.	1H-F49	2HL-F49	1
50	Oil pump gear (driver)	1H-F50	2HL-F50	1
51	Oil pump cover	1H-F51	2HL-F51	1
52	Allen hd screw, 1/4-20 x 1-1/4 in.	1H-F52	2HL-F52	4
53	Allen hd screw, 1/4-20 x 5/8 in.	1H-F53	2HL-F53	5
54	Acme blue label dowel, 1/4 x 5/8 in.	1H-F54	2HL-F54	1
55	Allen hd screw, 1/4-20 x 1/2 in.	1H-F55	2HL-F55	2
56	Acme blue label dowel, 1/4 x 11/16 in.	1H-F56	2HL-F56	1
57	Oil pump gear (driven)	1H-F57	2HL-F57	1
58	Oil pump gear stud	1H-F58	2HL-F58	1
59	Feed drive shaft fitting washer	1H-F59	2HL-F59	1
60	New Departure bearing, 3204	1H-F60	2HL-F60	1
61	Feed drive change gear and shaft (1/4-10, 1/2-20)	1H-F61	2HL-F61	1
62	Fil hd screw, 3/8-16 x 2-3/16 in.	1H-F62	2HL-F62	2
63	Feed drive shaft	1H-F63	2HL-F63	1
64	Hi-Pro key, HP-706	1H-F64	2HL-F64	1
65	Feed drive change gear washer	1H-F65	2HL-F65	1
66	Feed drive change gear (1/2-20, 1-40)	1H-F66a	2HL-F66a	1
	Feed drive change gear (3/4-30, 1-1/2-60)	1H-F66b	2HL-F66b	1
67	Rubber "O" ring	1H-F67	2HL-F67	1
68	Adjusting washer	1H-F68	2HL-F68	1
69	Rapid traverse lever shaft	1H-F69	2HL-F69	
70	Hi-Pro key, HP-505	1H-F70	2HL-F70	2
71	Rapid traverse clutch fork	1H-F71	2HL-F71	1
72	Rapid traverse clutch cone shoe	1H-F72	2HL-F72	2
73	Rapid traverse clutch cone	1H-F73	2HL-F73	1
74	Clutch cone bushing	1H-F74	2HL-F74	1
75	Adjusting yoke	1H-F75	2HL-F75	1
76	Clutch finger	1H-F76	2HL-F76	3
77	Cotter pin, 3/32 x 5/8 in.	1H-F77	2HL-F77	3
78	Finger lever pin	1H-F78	2HL-F78	3
79	Spring	1H-F79	2HL-F79	1
80	Adjusting lock pin	1H-F80	2HL-F80	1
81	Rapid traverse clutch floating plate	1H-F81	2HL-F81	1
82	Clutch plate (driver)	1H-F82	2HL-F82	5
83	Clutch plate (driven)	1H-F83	2HL-F83	5
84	Spring	1H-F84	2HL-F84	6
85	Rapid traverse clutch plate pin	1H-F85	2HL-F85	6
86	Rapid traverse clutch plate key	1H-F86	2HL-F86	3
87	Key	1H-F87	2HL-F87	1
88	Rapid traverse clutch hub and back plate	1H-F88	2HL-F88	1
89	Key	1H-F89	2HL-F89	1
90	Rapid traverse clutch gear bushing	1H-F90	2HL-F90	1
91	Rapid traverse clutch gear	1H-F91	2HL-F91	1
92	Rapid traverse clutch gear spacer	1H-F92	2HL-F92	1
93	Gurney bearing, MRC-104-S	1H-F93	2HL-F93	1
94	Drive shaft guard assembly (lower) including pins and screws	1H-F94	2HL-F94	1

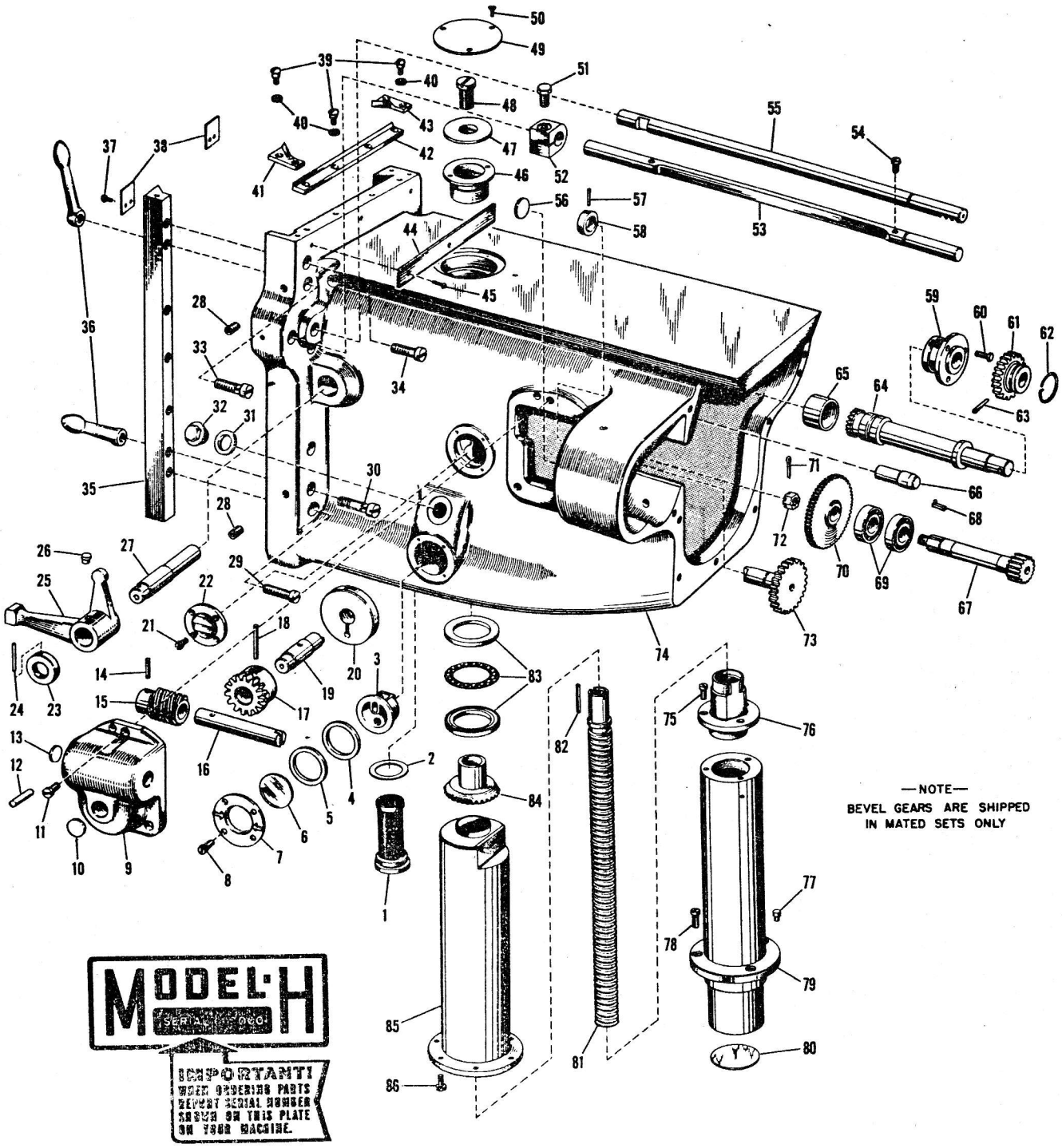

Figure 10. Knee

Figure 10. Knee

Item No.	Part Name and Description	Code No. 1H	2HL	Qty.
1	Oil intake screen, retaining plug and ring	1H-G1	2HL-G1	1
2	Intake screen retaining plug washer	1H-G2	2HL-G2	1
3	Sight oil flow gage	1H-G3	2HL-G3	1
4	Oil gage washer	1H-G4	2HL-G4	1
5	Oil gage washer	1H-G5	2HL-G5	1
6	Oil gage glass	1H-G6	2HL-G6	1
7	Oil flow gage plate	1H-G7	2HL-G7	1
8	Screw, 10-32 x 3/8 in.	1H-G8	2HL-G8	4
9	Feed change worm bracket	1H-G9	2HL-G9	1
10	Expansion plug, 1 in. dia	1H-G10	2HL-G10	1
11	Fil hd screw, 3/8-16 x 13/16 in.	1H-G11	2HL-G11	3
12	Acme blue label dowel, 3/8 x 1 in.	1H-G12	2HL-G12	2
13	Expansion plug, 7/8 in. dia	1H-G13	2HL-G13	1
14	Taper pin, #4 x 1-1/4 in.	1H-G14	2HL-G14	1
15	Feed change worm	1H-G15	2HL-G15	1
16	Feed change worm shaft	1H-G16	2HL-G16	1
17	Feed change worm gear	1H-G17	2HL-G17	1
18	Taper pin, #4 x 2-1/16 in.	1H-G18	2HL-G18	1
19	Feed change worm gear shaft	1H-G19	2HL-G19	1
20	Feed change worm gear bearing	1H-G20	2HL-G20	1
21	Screw, 10-32 x 3/8 in.	1H-G21	2HL-G21	4
22	Knee vent plate	1H-G22	2HL-G22	1
23	Vertical trip lever shaft collar	1H-G23	2HL-G23	1
24	Taper pin, #4 x 1-3/4 in.	1H-G24	2HL-G24	1
25	Vertical trip lever	1H-G25	2HL-G25	1
26	Gits oiler, 532	1H-G26	2HL-G26	1
27	Vertical trip lever shaft	1H-G27	2HL-G27	1
28	Allen headless set screw, 3/8-16 x 7/8 in.	1H-G28	2HL-G28	2
29	Fil hd screw, 1/2-13 x 1-3/4 in.	1H-G29	2HL-G29	4
30	Clamp handle screw (lower)	1H-G30	2HL-G30	1
31	Fiber washer	1H-G31	2HL-G31	1
32	Oil hole plug	1H-G32	2HL-G32	1
33	Clamp handle screw (upper)	1H-G33	2HL-G33	1
34	Fil hd screw, 1/2-13 x 11/16 in.	1H-G34	2HL-G34	1
35	Knee gib	1H-G35	2HL-G35	1
36	Knee clamp handle	1H-G36	2HL-G36	2
37	Rd hd mach screw, 10-32 x 3/8 in.	1H-G37	2HL-G37	4
38	Column dovetail wiper spring	1H-G38	2HL-G38	1
39	Wiper screw, 1/4-20	1H-G39	2HL-G39	6
40	Wiper screw spring	1H-G40	2HL-G40	6
41	Column dovetail wiper (LH)	1H-G41	2HL-G41	1
42	Column face bearing wiper	1H-G42	2HL-G42	1
43	Column dovetail wiper (RH)	1H-G43	2HL-G43	1
44	Column face wiper spring	1H-G44	2HL-G44	1
45	Rd hd mach screw, 10-32 x 3/8 in.	1H-G45	2HL-G45	3
46	Elevating bevel gear bearing	1H-G46	2HL-G46	1

Item No.	Part Name and Description	Code No. 1H	2HL	Qty.
47	Elevating screw retainer	1H-G47	2HL-G47	1
48	Retainer screw, 3/4-16 x 1-3/8 in.	1H-G48	2HL-G48	1
49	Elevating bevel gear cover	1H-G49	2HL-G49	1
50	Flat hd mach screw, 8-32 x 1/2 in.	1H-G50	2HL-G50	3
51	Hex hd trip dog screw, 7/16-14 x 1-9/16 in.	1H-G51	2HL-G51	2
52	Cross feed trip dog	1H-G52	2HL-G52	2
53	Cross feed trip rod	1H-G53	2HL-G53	1
54	Fil hd screw, 1/4-20 x 1/2 in.	1H-G54	2HL-G54	2
55	Vertical trip rod	1H-G55	2HL-G55	1
56	Expansion plug, 1-1/8 in. dia	1H-G56	2HL-G56	1
57	Taper pin, #2 x 1-1/4 in.	1H-G57	2HL-G57	1
58	Feed change gear shaft collar	1H-G58	2HL-G58	1
59	Elevating bevel pinion bearing (front)	1H-G59	2HL-G59	1
60	Hex hd cap screw, 5/16-18 x 15/16 in.	1H-G60	2HL-G60	3
61	Elevating drive gear (driven)	1H-G61	2HL-G61	1
62	Snap ring	1H-G62	2HL-G62	1
63	Taper pin, #3 x 1-1/4 in.	1H-G63	2HL-G63	1
64	Elevating bevel pinion	1H-G64	2HL-G64	1
65	Elevating bevel pinion bushing	1H-G65	2HL-G65	1
66	Feed distribution box pilot stud	1H-G66	2HL-G66	1
67	Low feed range pinion	1H-G67a	2HL-G67a	1
	High feed range pinion	1H-G67b	2HL-G67b	1
68	Key	1H-G68	2HL-G68	1
69	New Departure bearing, 1204	1H-G69	2HL-G69	2
70	Primary range feed drive gear (3/4-30; 1-1/2-60)	1H-G70a	2HL-G70a	1
	Primary range feed drive gear (1/2-20; 1-40)	1H-G70b	2HL-G70b	1
	Primary range feed drive gear (1/4-10; 1/2-20)	1H-G70c	2HL-G70c	1
71	Cotter pin, 1/8 x 1-1/8 in.	1H-G71	2HL-G71	1
72	Nut, 1/2-13	1H-G72	2HL-G72	1
73	Feed change gear (driven)	1H-G73	2HL-G73	1
74	Knee	1H-G74	2HL-G74	1
75	Fil hd screw, 3/8-16 x 13/16 in.	1H-G75	2HL-G75	3
76	Elevating nut	1H-G76	2HL-G76	1
77	Elevating nut extension stop pin	1H-G77	2HL-G77	1
78	Fil hd screw, 3/8-16 x 13/16 in.	1H-G78	2HL-G78	3
79	Elevating nut extension	1H-G79	2HL-G79	1
80	Expansion plug, 2-1/2 in. dia	1H-G80	2HL-G80	1
81	Elevating screw	1H-G81	2HL-G81	1
82	Key	1H-G82	2HL-G82	1
83	Gurney bearing, #13	1H-G83	2HL-G83	1
84	Elevating bevel gear	1H-G84	2HL-G84	1
85	Elevating screw shield assembly	1H-G85	2HL-G85	1
86	Fil hd screw, 5/16-18 x 9/16 in.	1H-G86	2HL-G86	6

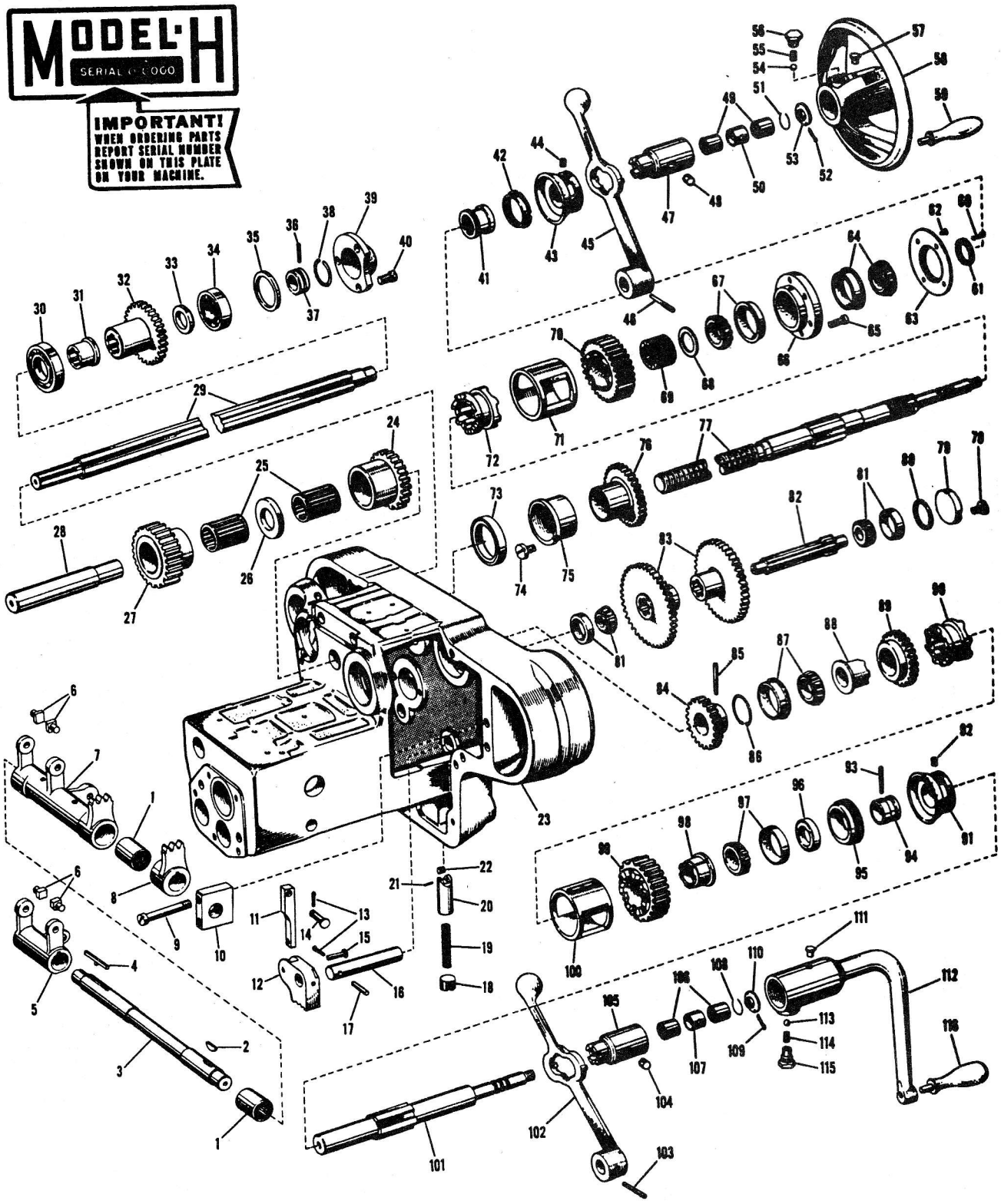

Figure 11. Feed Distribution Box - Feed Selection and Directional Control Levers

Figure 11. Feed Distribution Box - Feed Selection and Directional Control Levers

Item No.	Part Name and Description	Code No. 1H	2HL	Qty.
1	Torrington bearing, B-1416	1H-H1	2HL-H1	2
2	Hi-Pro key, HP705	1H-H2	2HL-H2	1
3	Cross feed and elevating clutch fork shaft	1H-H3	2HL-H3	1
4	Key	1H-H4	2HL-H4	1
5	Cross feed clutch fork	1H-H5	2HL-H5	1
6	Cross feed and elevating clutch fork shoe	1H-H6	2HL-H6	4
7	Elevating clutch fork and trip segment	1H-H7	2HL-H7	1
8	Cross feed trip segment	1H-H8	2HL-H8	1
9	Fil hd screw, 3/8-16 x 2-5/8 in.	1H-H9	2HL-H9	2
10	Clutch fork shaft left end bearing	1H-H10	2HL-H10	1
11	Cross feed and elevating reverse link	1H-H11	2HL-H11	2
12	Cross feed and elevating inner lever and detent	1H-H12	2HL-H12	2
13	Cotter pin, 3/32 x 5/8 in.	1H-H13	2HL-H13	4
14	Cross feed and elevating reverse link pin (upper)	1H-H14	2HL-H14	2
15	Cross feed and elevating reverse link pin (lower)	1H-H15	2HL-H15	2
16	Cross and elevating reverse lever shaft	1H-H16	2HL-H16	2
17	Taper pin, #4 x 1-7/8 in.	1H-H17	2HL-H17	2
18	Screw plug, 15/16-16 x 5/16 in.	1H-H18	2HL-H18	2
19	Spring	1H-H19	2HL-H19	2
20	Trip detent plunger	1H-H20	2HL-H20	2
21	Detent roller pin	1H-H21	2HL-H21	2
22	Detent plunger roller	1H-H22	2HL-H22	2
23	Distribution box	1H-H23	2HL-H23	1
24	Cross feed drive gear (front)	1H-H24	2HL-H24	1
25	Hyatt bearing, 93528	1H-H25	2HL-H25	2
26	Cross feed drive gear spacer	1H-H26	2HL-H26	1
27	Cross feed drive gear (rear)	1H-H27	2HL-H27	1
28	Cross feed drive gear shaft	1H-H28	2HL-H28	1
29	Table feed shaft	1H-H29	2HL-H29	1
30	Norma Hoffman bearing, S-11	1H-H30	2HL-H30	1
31	Bearing sleeve	1H-H31	2HL-H31	1
32	Table feed spur gear	1H-H32	2HL-H32	1
33	Table feed shaft spacer	1H-H33	2HL-H33	1
34	New Departure bearing, ND-1204	1H-H34	2HL-H34	1
35	Table feed shaft bearing collar	1H-H35	2HL-H35	1
36	Taper pin, #3 x 1-1/8 in.	1H-H36	2HL-H36	1
37	Table feed shaft collar	1H-H37	2HL-H37	1
38	Spring	1H-H38	2HL-H38	1
39	Table feed shaft cover	1H-H39	2HL-H39	1
40	Fil hd screw, 5/16-18 x 11/16 in.	1H-H40	2HL-H40	3
41	Cross feed screw adjusting nut	1H-H41	2HL-H41	1
42	Cross feed screw bearing adjusting ring	1H-H42	2HL-H42	1
43	Graduated dial (250 divisions)	1H-H43	2HL-H43	1
44	Dial screw, 3/8-16 x 3/8 in.	1H-H44	2HL-H44	1
45	Cross and elevating reverse lever (plain)	1H-H45a	2HL-H45a	1
	Cross and elevating reverse lever (universal)	1H-H45b	2HL-H45b	1
46	Taper pin, #3 x 1-1/8 in.	1H-H46	2HL-H46	1
47	Cross and elevating clutch	1H-H47	2HL-H47	1
48	Plug	1H-H48	2HL-H48	1
49	Torrington bearing, B-1012	1H-H49	2HL-H49	2
50	Bearing spacer	1H-H50	2HL-H50	1
51	Snap ring	1H-H51	2HL-H51	1
52	Cotter pin, 5/32 x 3/4 in.	1H-H52	2HL-H52	1
53	Hand feed clutch stop	1H-H53	2HL-H53	1
54	Steel ball, 1/4 in. dia	1H-H54	2HL-H54	1
55	Spring	1H-H55	2HL-H55	1
56	Hand elevating crank set screw	1H-H56	2HL-H56	1
57	Gits oiler, RS-532	1H-H57	2HL-H57	1
58	Cross feed handwheel	1H-H58	2HL-H58	1
59	Rockwood handle, #1QA	1H-H59	2HL-H59	1

Item No.	Part Name and Description	Code No. 1H	2HL	Qty.
60	Key	1H-H60	2HL-H60	1
61	Cross feed screw bearing adjusting ring	1H-H61	2HL-H61	1
62	Flat hd mach screw, #8-32 x 3/8 in.	1H-H62	2HL-H62	4
63	Cross feed clutch oil retainer	1H-H63	2HL-H63	1
64	Timken bearing, 07204B-07100W	1H-H64	2HL-H64	1
65	Allen hd cap screw, 5/16 x 3/4 in.	1H-H65	2HL-H65	6
66	Cross feed clutch bearing carrier	1H-H66	2HL-H66	1
67	Timken bearing, 07204B-07100	1H-H67	2HL-H67	1
68	Cross feed clutch gear thrust washer	1H-H68	2HL-H68	1
69	Hyatt bearing, 94616	1H-H69	2HL-H69	1
70	Cross feed reverse clutch gear (front)	1H-H70	2HL-H70	1
71	Cross feed and elevating clutch gear spacer	1H-H71	2HL-H71	1
72	Cross feed reverse clutch	1H-H72	2HL-H72	1
73	Victoprene oil seal, 60320	1H-H73	2HL-H73	1
74	Fil hd screw, 3/8-16 x 9/16 in.	1H-H74	2HL-H74	2
75	Cross feed clutch gear bearing (rear)	1H-H75	2HL-H75	1
76	Cross feed reverse clutch gear (rear)	1H-H76	2HL-H76	1
77	Cross feed screw	1H-H77	2HL-H77	1
78	Fil hd screw, 3/8-16 x 9/16 in.	1H-H78	2HL-H78	2
79	Cross feed and elevating reverse gear shaft cover	1H-H79	2HL-H79	1
80	Cross feed and elevating gear bearing washer	1H-H80	2HL-H80	1
81	Timken bearing, 03162-03062	1H-H81	2HL-H81	2
82	Cross feed and elevating reverse gear shaft	1H-H82	2HL-H82	1
83	Cross feed and elevating reverse gear	1H-H83	2HL-H83	2
84	Elevating gear (driver)	1H-H84	2HL-H84	1
85	Taper pin, #3 x 1-3/8 in.	1H-H85	2HL-H85	1
86	Snap ring	1H-H86	2HL-H86	1
87	Timken bearing, 07204B-07100	1H-H87	2HL-H87	1
88	Elevating clutch gear bushing	1H-H88	2HL-H88	1
89	Elevating clutch gear (rear)	1H-H89	2HL-H89	1
90	Cross feed reverse clutch	1H-H90	2HL-H90	1
91	Graduated dial	1H-H91	2HL-H91	1
92	Dial screw, 3/8-16 x 3/8 in.	1H-H92	2HL-H92	1
93	Taper pin, #2 x 1-5/16 in.	1H-H93	2HL-H93	1
94	Hand elevating shaft collar	1H-H94	2HL-H94	1
95	Elevating bearing adjusting nut	1H-H95	2HL-H95	1
96	Perfect oil seal	1H-H96	2HL-H96	1
97	Timken bearing, 07204B-07100	1H-H97	2HL-H97	1
98	Elevating clutch gear bushing	1H-H98	2HL-H98	1
99	Elevating clutch gear (front)	1H-H99	2HL-H99	1
100	Cross feed and elevating clutch gear spacer	1H-H100	2HL-H100	1
101	Elevating clutch shaft	1H-H101	2HL-H101	1
102	Cross and elevating reverse lever (plain)	1H-H102a	2HL-H102a	1
	Cross and elevating reverse lever (universal)	1H-H102b	2HL-H102b	1
103	Taper pin, #3 x 1-1/8 in.	1H-H103	2HL-H103	1
104	Plug	1H-H104	2HL-H104	1
105	Cross and elevating clutch	1H-H105	2HL-H105	1
106	Torrington bearing, B-1012	1H-H106	2HL-H106	2
107	Bearing spacer	1H-H107	2HL-H107	1
108	Snap ring	1H-H108	2HL-H108	1
109	Cotter pin, 5/32 x 3/4 in.	1H-H109	2HL-H109	1
110	Hand feed clutch stop	1H-H110	2HL-H110	1
111	Gits oiler, RS-532	1H-H111	2HL-H111	1
112	Hand elevating crank	1H-H112	2HL-H112	1
113	Steel ball, 1/4 in. dia	1H-H113	2HL-H113	1
114	Spring	1H-H114	2HL-H114	1
115	Hand elevating crank set screw	1H-H115	2HL-H115	1
116	Rockwood handle, 3QA	1H-H116	2HL-H116	1

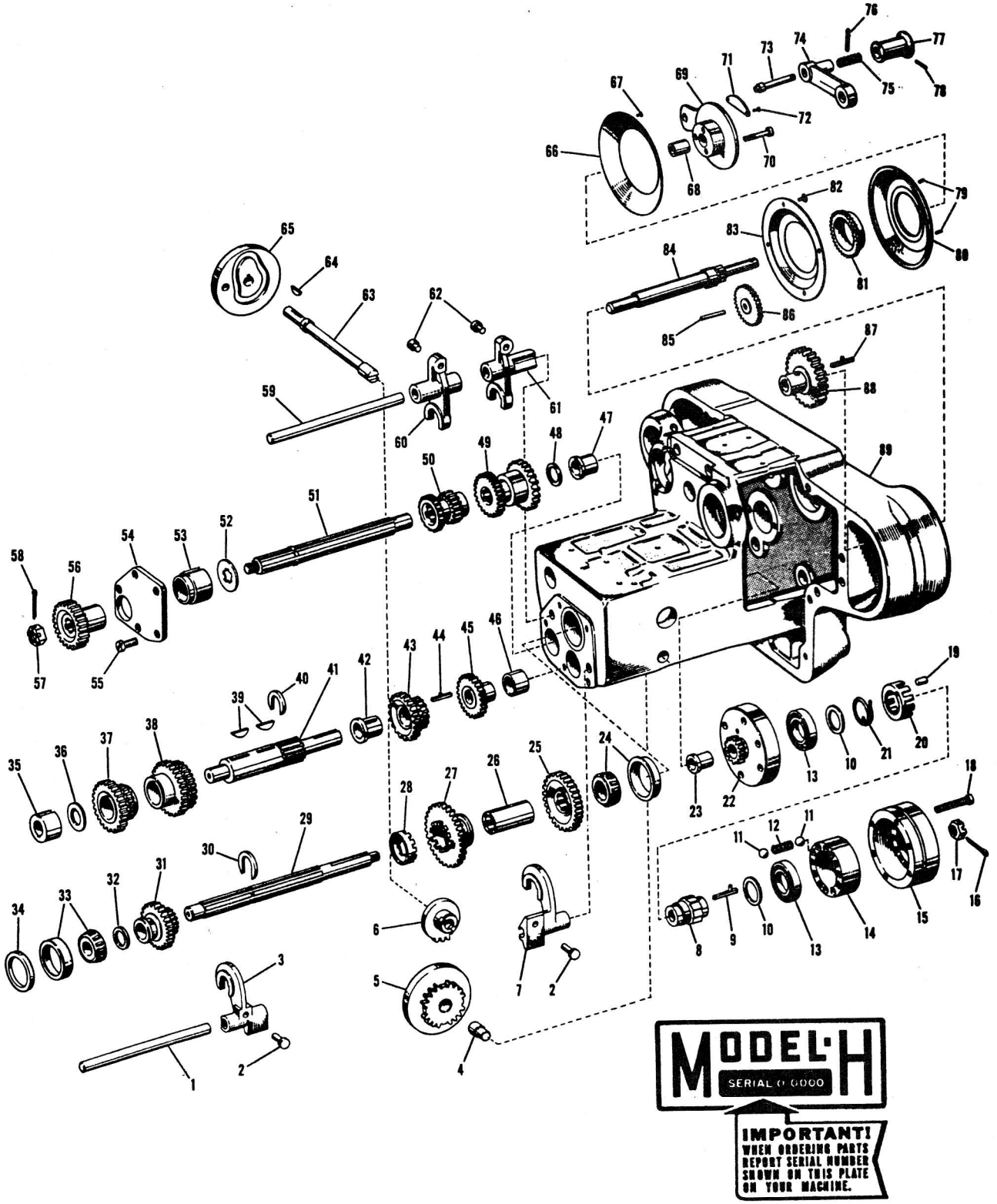

Figure 12. Feed Distribution Box - Gear Trains

Figure 12. Feed Distribution Box - Gear Trains

Item No.	Part Name and Description	Code No. 1H	2HL	Qty.
1	Feed change shifter rod	1H-J1	2HL-J1	1
2	Shifter cam follower stud	1H-J2	2HL-J2	2
3	Tertiary high feed shifter	1H-J3	2HL-J3	1
4	Secondary feed change cam stud	1H-J4	2HL-J4	1
5	Secondary feed change cam	1H-J5	2HL-J5	1
6	Feed change cam intermittent gear	1H-J6	2HL-J6	1
7	Tertiary low feed shifter	1H-J7	2HL-J7	1
8	Roller clutch hub	1H-J8	2HL-J8	1
9	Key	1H-J9	2HL-J9	1
10	Roller clutch space collar	1H-J10	2HL-J10	2
11	Steel ball, 1/4 in. dia	1H-J11	2HL-J11	24
12	Spring	1H-J12	2HL-J12	12
13	Norma Hoffman bearing, S-11	1H-J13	2HL-J13	2
14	Feed slip clutch ball and spring retainer	1H-J14	2HL-J14	1
15	Feed slip clutch back plate	1H-J15	2HL-J15	1
16	Cotter pin, 1/8 x 1-1/8 in.	1H-J16	2HL-J16	1
17	Hex nut	1H-J17	2HL-J17	1
18	Allen soc hd cap screw, 1/4 x 1-3/4 in.	1H-J18	2HL-J18	6
19	Feed clutch roller	1H-J19	2HL-J19	10
20	Feed clutch roller cage	1H-J20	2HL-J20	1
21	Feed roller clutch spring	1H-J21	2HL-J21	1
22	Feed slip clutch gear and plate	1H-J22	2HL-J22	1
23	Spacing bushing	1H-J23	2HL-J23	1
24	Timken bearing, 05185B-05075	1H-J24	2HL-J24	1
25	Tertiary low speed gear	1H-J25	2HL-J25	1
26	Tertiary clutch gear bearing	1H-J26	2HL-J26	1
27	Tertiary intermediate speed clutch gear	1H-J27	2HL-J27	1
28	Tertiary shaft clutch drive collar	1H-J28	2HL-J28	1
29	Tertiary feed and slip clutch shaft	1H-J29	2HL-J29	1
30	Tertiary shaft U-washer	1H-J30	2HL-J30	1
31	Tertiary high speed cluster gear	1H-J31	2HL-J31	1
32	Tertiary feed shaft and slip clutch spacer	1H-J32	2HL-J32	1
33	Timken bearing, 05185-05062	1H-J33	2HL-J33	1
34	Tertiary shaft bearing fitting washer	1H-J34	2HL-J34	1
35	Secondary feed shaft bearing (rear)	1H-J35	2HL-J35	1
36	Secondary feed shaft thrust washer	1H-J36	2HL-J36	1
37	Secondary shaft intermediate speed cluster gear	1H-J37	2HL-J37	1
38	Secondary shaft low speed cluster gear	1H-J38	2HL-J38	1
39	Hi-pro key, HP806	1H-J39	2HL-J39	2
40	Secondary high speed gear U-washer	1H-J40	2HL-J40	1
41	Secondary feed gear pinion shaft	1H-J41	2HL-J41	1
42	Cluster idler gear bearing	1H-J42	2HL-J42	1
43	Cluster idler gear	1H-J43	2HL-J43	1
44	Tit key	1H-J44	2HL-J44	1
45	Secondary shaft high speed gear	1H-J45	2HL-J45	1

Item No.	Part Name and Description	Code No. 1H	2HL	Qty.
46	Secondary shaft high speed gear bushing	1H-J46	2HL-J46	1
47	Primary shaft bearing (front)	1H-J47	2HL-J47	1
48	Primary shaft thrust washer (front)	1H-J48	2HL-J48	1
49	Primary high feed cluster gear	1H-J49	2HL-J49	1
50	Primary low speed cluster gear	1H-J50	2HL-J50	1
51	Primary feed shaft	1H-J51	2HL-J51	1
52	Primary shaft thrust washer (rear)	1H-J52	2HL-J52	1
53	Range gear bearing	1H-J53	2HL-J53	1
54	Distribution box back plate	1H-J54	2HL-J54	1
55	Fil hd screw, 5/16-18 x 11/16 in.	1H-J55	2HL-J55	5
56	Secondary range gear (1/4-10; 1/2-20; 3/4-30)	1H-J56a	2HL-J56a	1
	Secondary range gear (1/2-20; 1-40; 1-1/2-60)	1H-J56b	2HL-J56b	1
57	Hex nut, 1/2-13	1H-J57	2HL-J57	1
58	Cotter pin, 1/8 x 1-1/8 in.	1H-J58	2HL-J58	1
59	Feed change shifter rod	1H-J59	2HL-J59	1
60	Primary low feed shifter	1H-J60	2HL-J60	1
61	Primary high feed shifter	1H-J61	2HL-J61	1
62	Shifter cam follower stud	1H-J62	2HL-J62	2
63	Feed change cam shaft	1H-J63	2HL-J63	1
64	Hi-pro key, HP 503	1H-J64	2HL-J64	1
65	Primary feed change cam	1H-J65	2HL-J65	1
66	Feed selection dial (1/4-10)	1H-J66a	2HL-J66a	1
	Feed selection dial (1/2-20)	1H-J66b	2HL-J66b	1
	Feed selection dial (3/4-30)	1H-J66c	2HL-J66c	1
	Feed selection dial (1-40)	1H-J66d	2HL-J66d	1
	Feed selection dial (1-1/2-60)	1H-J66e	2HL-J66e	1
67	Escutcheon pin, #15	1H-J67	2HL-J67	8
68	Oilite bushing, A 604	1H-J68	2HL-J68	1
69	Feed dial support bracket	1H-J69	2HL-J69	1
70	Fil hd screw, 1/4-20 x 1-1/2 in.	1H-J70	2HL-J70	3
71	Feed selection arrow	1H-J71	2HL-J71	1
72	Escutcheon pin, #15	1H-J72	2HL-J72	3
73	Feed selection lever plunger	1H-J73	2HL-J73	1
74	Feed selection lever	1H-J74	2HL-J74	1
75	Spring	1H-J75	2HL-J75	1
76	Taper pin, #2 x 1-1/8 in.	1H-J76	2HL-J76	1
77	Feed selection knob	1H-J77	2HL-J77	1
78	Taper pin, #2 x 7/8 in.	1H-J78	2HL-J78	1
79	Feed dial carrier pin	1H-J79	2HL-J79	1
80	Feed dial carrier	1H-J80	2HL-J80	1
81	Feed dial carrier gear	1H-J81	2HL-J81	1
82	Rd hd mach screw, 10-32 x 1/4 in.	1H-J82	2HL-J82	4
83	Grease shield	1H-J83	2HL-J83	1
84	Feed dial shaft	1H-J84	2HL-J84	1
85	Acme blue label dowel, 1/4 x 1-1/4 in.	1H-J85	2HL-J85	1
86	Feed selection double gear	1H-J86	2HL-J86	1
87	Key	1H-J87	2HL-J87	1
88	Feed change gear (driver)	1H-J88	2HL-J88	1
89	Distribution box	1H-J89	2HL-J89	1

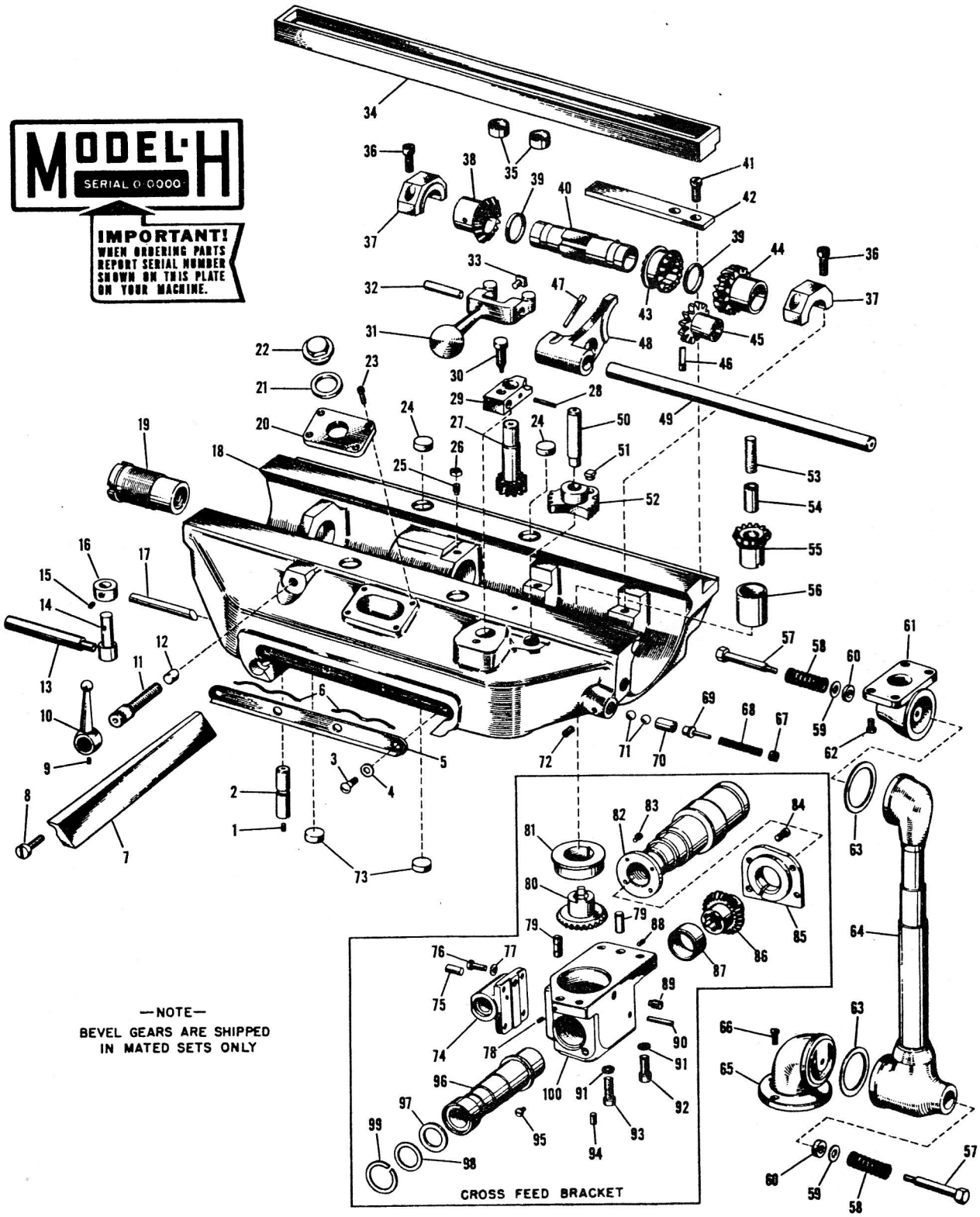

Figure 12 — Plain Saddle, Coolant Return and Cross Feed Bracket

Figure 13. Plain Saddle, Coolant Return and Cross Feed Bracket

Item No.	Part Name and Description	Code No. 1H	2HL	Qty.
	PLAIN SADDLE			
1	Allen set screw, 1/4-20 x 1/4 in.	1H-K1	2HL-K1	1
2	Saddle trip stud	1H-K2	2HL-K2	1
3	Wiper screw, 1/4-20 x 3/8 in.	1H-K3	2HL-K3	8
4	Wiper screw spring	1H-K4	2HL-K4	8
5	Knee top wiper (front and rear)	1H-K5	2HL-K5	2
6	Knee top wiper spring	1H-K6	2HL-K6	2
7	Saddle gib	1H-K7	2HL-K7	1
8	Gib screw, 3/8-16 x 1-1/2 in.	1H-K8	2HL-K8	2
9	Allen set screw, 1/4-20 x 1/4 in.	1H-K9	2HL-K9	1
10	Clamp lever	1H-K10	2HL-K10	1
11	Clamp screw, 1/2-13 x 2-3/16 in.	1H-K11	2HL-K11	1
12	Table clamp plug	1H-K12	2HL-K12	1
13	Saddle clamp handle	1H-K13	2HL-K13	1
14	Saddle clamp eccentric shaft	1H-K14	2HL-K14	1
15	Allen dog pt set screw, 5/16-18 x 5/16 in.	1H-K15	2HL-K15	1
16	Saddle clamp eccentric	1H-K16	2HL-K16	1
17	Saddle clamp rod	1H-K17	2HL-K17	1
18	Plain saddle	1H-K18	2HL-K18	1
19	Table screw nut	1H-K19	2HL-K19	1
20	Oil pocket cover	1H-K20	2HL-K20	1
21	Washer	1H-K21	2HL-K21	1
22	Oil hole plug, 7/8-16 x 5/16 in.	1H-K22	2HL-K22	1
23	Fil hd screw, 1/4-20 x 11/16 in.	1H-K23	2HL-K23	4
24	Felt oil pad	1H-K24	2HL-K24	4
25	Dog pt set screw, 3/8-16 x 3/4 in.	1H-K25	2HL-K25	1
26	Hex nut, 3/8-16	1H-K26	2HL-K26	1
27	Table trip lever pinion shaft	1H-K27	2HL-K27	1
28	Taper pin, #5 x 1-3/4 in.	1H-K28	2HL-K28	1
29	Table trip lever block	1H-K29	2HL-K29	1
30	Table trip lever block screw, 3/8-16 x 1-1/8 in.	1H-K30	2HL-K30	1
31	Table trip lever	1H-K31	2HL-K31	1
32	Acme blue label dowel, 3/8 x 2-1/2 in.	1H-K32	2HL-K32	1
33	Trip lever pin	1H-K33	2HL-K33	1
34	Saddle slide	1H-K34		1
	Saddle slide		2HL-K34	1
35	Pipe in saddle slide	1H-K35	2HL-K35	2
36	Allen hd cap screw, 3/8 x 1 in.	1H-K36	2HL-K36	4
37	Bearing cap	1H-K37	2HL-K37	2
38	Table screw clutch gear	1H-K38	2HL-K38	1
39	Clutch gear collar	1H-K39	2HL-K39	2
40	Feed reverse gear sleeve	1H-K40	2HL-K40	1
41	Fil hd screw, 5/16-18 x 11/16 in.	1H-K41	2HL-K41	2
42	Saddle slide stop	1H-K42		1
	Saddle slide stop		2HL-K42	1
43	Table feed reverse clutch	1H-K43	2HL-K43	1
44	Table screw clutch gear	1H-K44	2HL-K44	1
45	Rotary table drive shaft gear	1H-K45	2HL-K45	1
46	Rotary table drive gear stop pin	1H-K46	2HL-K46	1
47	Hex hd taper pin screw, 3/8-24	1H-K47	2HL-K47	1
48	Table reverse yoke	1H-K48	2HL-K48	1
49	Reverse shifter rod	1H-K49	2HL-K49	1
50	Trip lever segment shaft	1H-K50	2HL-K50	1
51	Trip lever shoe	1H-K51	2HL-K51	1
52	Table trip detent and segment	1H-K52	2HL-K52	1
53	Table drive gear felt	1H-K53	2HL-K53	1
54	Table drive gear plug	1H-K54	2HL-K54	1
55	Table drive gear	1H-K55	2HL-K55	1
56	Table drive gear bearing	1H-K56	2HL-K56	1
57	Hex hd screw, 3/8-16 x 3-7/16 in.	1H-K57	2HL-K57	2
58	Spring	1H-K58	2HL-K58	2
59	Swivel screw washer	1H-K59	2HL-K59	2
60	Swivel screw felt washer	1H-K60	2HL-K60	2
61	Coolant return swivel fitting	1H-K61	2HL-K61	1
62	Fil hd screw, 3/8-16 x 13/16 in.	1H-K62	2HL-K62	4
63	Coolant return elbow washer	1H-K63	2HL-K63	2
64	Coolant return assembly	1H-K64	2HL-K64	1
65	Coolant return elbow	1H-K65	2HL-K65	1
66	Fil hd screw, 3/8-16 x 13/16 in.	1H-K66	2HL-K66	3
67	Detent plunger guide	1H-K67	2HL-K67	1
68	Detent spring	1H-K68	2HL-K68	1
69	Detent plunger rod	1H-K69	2HL-K69	1
70	Detent plunger sleeve	1H-K70	2HL-K70	1
71	Steel ball, 5/16 in. dia	1H-K71	2HL-K71	2
72	Soc hd set screw, 1/4-20 x 1/4 in.	1H-K72	2HL-K72	1
73	Felt oil pad	1H-K73	2HL-K73	4
	CROSS FEED BRACKET			
74	Cross feed nut	1H-K74	2HL-K74	1
75	Acme blue label dowel, 3/8 x 1 in.	1H-K75	2HL-K75	1
76	Hex hd bolt, 5/16-18 x 15/16 in.	1H-K76	2HL-K76	4
77	Lockwasher, 5/16 in.	1H-K77	2HL-K77	4
78	Allen set screw, #10-24 x 3/8 in.	1H-K78	2HL-K78	1
79	Acme blue label dowel, 1/2 x 1-1/4 in.	1H-K79	2HL-K79	2
80	Table feed drive bevel gear	1H-K80	2HL-K80	1
81	Cross feed bracket bearing sleeve	1H-K81	2HL-K81	1
82	Telescopic tube assembly (rear)	1H-K82	2HL-K82	1
83	Fil hd screw, #10-32 x 5/16 in.	1H-K83	2HL-K83	4
84	Fil hd cap screw, 5/16-18 x 9/16 in.	1H-K84	2HL-K84	4
85	Cross feed bracket bearing	1H-K85	2HL-K85	1
86	Table feed sliding bevel gear	1H-K86	2HL-K86	1
87	Table feed sliding bevel gear bushing	1H-K87	2HL-K87	1
88	Allen set screw, #10-24 x 1/2 in.	1H-K88	2HL-K88	1
89	Segment collar screw, 3/8-16 x 11/16 in.	1H-K89	2HL-K89	1
90	Pin, 3/16 x 7/8 in.	1H-K90	2HL-K90	1
91	Lockwasher, 7/16 in	1H-K91	2HL-K91	3
92	Soc hd cap screw, 7/16 x 7/8 in.	1H-K92	2HL-K92	1
93	Soc hd cap screw, 7/16 x 1 in.	1H-K93	2HL-K93	2
94	Coolant drip spout	1H-K94	2HL-K94	1
95	Fil hd screw, 1/4-20 x 3/8 in.	1H-K95	2HL-K95	2
96	Telescopic tube assembly (front)	1H-K96	2HL-K96	1
97	Felt oil retaining washer	1H-K97	2HL-K97	1
98	Felt retainer	1H-K98	2HL-K98	1
99	Snap ring	1H-K99	2HL-K99	1
100	Cross feed bracket	1H-K100	2HL-K100	1

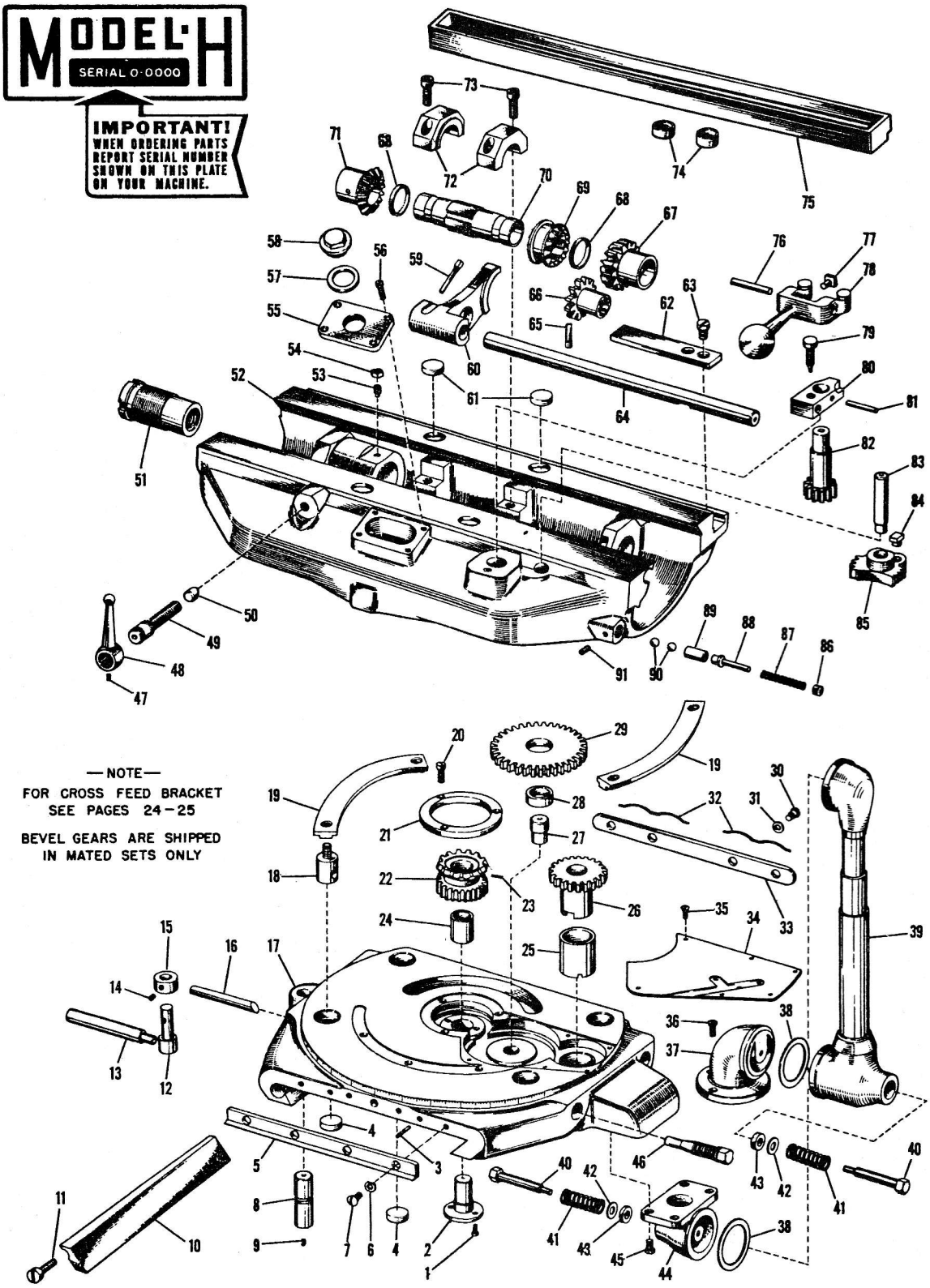

Figure 14. Swivel Block, Coolant Return and Universal Saddle

Figure 14. Swivel Block, Coolant Return and Universal Saddle

Item No.	Part Name and Description	Code Nos. 1H	2HL	Qty.
	UNIVERSAL SADDLE			
1	Fil hd screw, 1/4-20 x 1/2 in.	1H-L1	2HL-L1	2
2	Table drive bevel gear stud	1H-L2	2HL-L2	1
3	Knee top wiper spring	1H-L3	2HL-L3	2
4	Oil pad	1H-L4	2HL-L4	4
5	Knee top wiper (front)	1H-L5	2HL-L5	1
6	Wiper screw spring	1H-L6	2HL-L6	4
7	Wiper screw, 1/4-20 x 3/8 in.	1H-L7	2HL-L7	4
8	Saddle trip stud	1H-L8	2HL-L8	1
9	Allen set screw, 1/4-20 x 1/4 in.	1H-L9	2HL-L9	1
10	Universal saddle gib	1H-L10	2HL-L10	1
11	Fil hd gib screw, 3/8-16 x 1-1/2 in.	1H-L11	2HL-L11	2
12	Saddle clamp eccentric shaft	1H-L12	2HL-L12	1
13	Saddle clamp handle	1H-L13	2HL-L13	1
14	Allen dog pt set screw, 5/16-18 x 5/16 in.	1H-L14	2HL-L14	1
15	Saddle clamp eccentric	1H-L15	2HL-L15	1
16	Saddle clamp rod	1H-L16	2HL-L16	1
17	Universal saddle	1H-L17	2HL-L17	1
18	Swivel block clamp bolt	1H-L18	2HL-L18	4
19	Swivel block clamp ring	1H-L19	2HL-L19	2
20	Fil hd screw, 5/16-18 x 3/4 in.	1H-L20	2HL-L20	3
21	Universal saddle ring	1H-L21	2HL-L21	1
22	Table screw drive bevel gear	1H-L22	2HL-L22	1
23	Pin, 3/8 x 3/16 in.	1H-L23	2HL-L23	1
24	Drive bevel gear bushing	1H-L24	2HL-L24	1
25	Table drive gear bushing	1H-L25	2HL-L25	1
26	Table drive gear	1H-L26	2HL-L26	1
27	Table drive idler stud	1H-L27	2HL-L27	1
28	Table drive idler gear bushing	1H-L28	2HL-L28	1
29	Table drive idler gear	1H-L29	2HL-L29	1
30	Wiper screw, 1/4-20 x 3/8 in.	1H-L30	2HL-L30	4
31	Wiper screw spring	1H-L31	2HL-L31	4
32	Knee top wiper spring	1H-L32	2HL-L32	2
33	Knee top wiper (rear)	1H-L33	2HL-L33	1
34	Saddle cover	1H-L34	2HL-L34	1
35	Flat hd mach screw, #8-32 x 3/8 in.	1H-L35	2HL-L35	6
36	Fil hd screw 3/8-16 x 13/16 in.	1H-L36	2HL-L36	3
37	Coolant return elbow	1H-L37	2HL-L37	1
38	Coolant return elbow washer	1H-L38	2HL-L38	2
39	Coolant return assembly	1H-L39	2HL-L39	1
40	Hex hd screw	1H-L40	2HL-L40	2
41	Spring	1H-L41	2HL-L41	2
42	Swivel screw washer	1H-L42	2HL-L42	2
43	Swivel screw felt washer	1H-L43	2HL-L43	2
44	Coolant return swivel fitting	1H-L44	2HL-L44	1
45	Fil hd screw, 3/8-16 x 5/8 in.	1H-L45	2HL-L45	4
46	Swivel block clamp screw, 3/4-16	1H-L46	2HL-L46	4

Item No.	Part Name and Description	Code Nos. 1H	2HL	Qty.
	SWIVEL BLOCK			
47	Allen set screw, 1/4-20 x 1/4 in.	1H-L47	2HL-L47	1
48	Clamp lever	1H-L48	2HL-L48	1
49	Clamp screw	1H-L49	2HL-L49	1
50	Table clamp plug	1H-L50	2HL-L50	1
51	Table screw nut	1H-L51	2HL-L51	1
52	Swivel block	1H-L52	2HL-L52	1
53	Dog pt set screw, 3/8-16 x 3/4 in.	1H-L53	2HL-L53	1
54	Hex nut, 3/8-16	1H-L54	2HL-L54	1
55	Oil pocket cover	1H-L55	2HL-L55	1
56	Fil hd screw, 1/4-20 x 11/16 in.	1H-L56	2HL-L56	4
57	Washer	1H-L57	2HL-L57	1
58	Oil hole plug, 7/8-16 x 5/16 in.	1H-L58	2HL-L58	1
59	Hex hd taper pin screw, 3/8-24	1H-L59	2HL-L59	1
60	Table reverse yoke	1H-L60	2HL-L60	1
61	Oil pad	1H-L61	2HL-L61	4
62	Saddle slide stop	1H-L62		1
	Saddle slide stop		2HL-L62	1
63	Fil hd screw, 5/16-18 x 11/16 in.	1H-L63	2HL-L63	2
64	Reverse yoke rod	1H-L64	2HL-L64	1
65	Rotary table drive gear stop pin	1H-L65	2HL-L65	1
66	Rotary table drive shaft gear	1H-L66	2HL-L66	1
67	Table screw clutch gear	1H-L67	2HL-L67	1
68	Clutch gear collar	1H-L68	2HL-L68	2
69	Table feed reverse clutch	1H-L69	2HL-L69	1
70	Feed reverse gear sleeve	1H-L70	2HL-L70	1
71	Table screw clutch gear	1H-L71	2HL-L71	1
72	Bearing cap	1H-L72	2HL-L72	2
73	Allen hd cap screw, 3/8 x 1 in.	1H-L73	2HL-L73	
74	Saddle slide pipe	1H-L74	2HL-L74	1
75	Saddle slide	1H-L75		1
	Saddle slide		2HL-L75	1
76	Acme blue label dowel, 3/8 x 2-1/2 in.	1H-L76	2HL-L76	1
77	Trip lever pin	1H-L77	2HL-L77	1
78	Table trip lever	1H-L78	2HL-L78	1
79	Table trip lever block screw, 3/8-16 x 1-1/8 in.	1H-L79	2HL-L79	1
80	Table trip lever block	1H-L80	2HL-L80	1
81	Taper pin, #5 x 1-3/4 in.	1H-L81	2HL-L81	1
82	Table trip lever pinion shaft	1H-L82	2HL-L82	1
83	Trip lever segment shaft	1H-L83	2HL-L83	1
84	Trip lever shoe	1H-L84	2HL-L84	1
85	Trip lever detent and segment	1H-L85	2HL-L85	1
86	Detent plunger guide	1H-L86	2HL-L86	1
87	Detent spring	1H-L87	2HL-L87	1
88	Detent plunger rod	1H-L88	2HL-L88	1
89	Detent plunger sleeve	1H-L89	2HL-L89	1
90	Steel ball 5/16 in.	1H-L90	2HL-L90	2
91	Soc hd set screw, 1/4-20 x 1/4 in.	1H-L91	2HL-L91	1

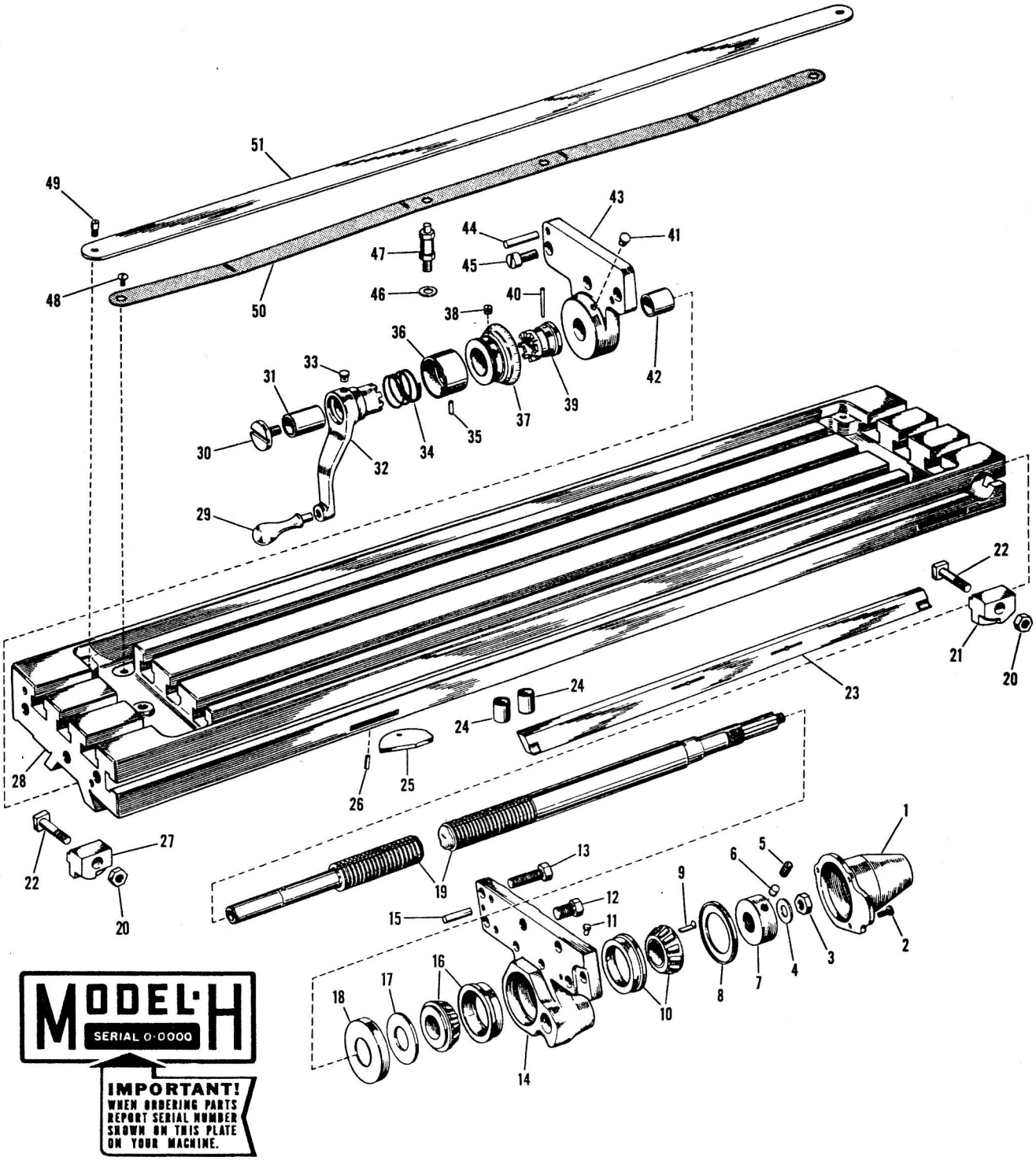

Figure 15. Table

Figure 15. Table

Item No.	Part Name and Description	Code No. 1H	2HL	Qty.
1	Table bracket cover (RH)	1H-M1	2HL-M1	1
2	Screw	1H-M2	2HL-M2	3
3	Hex nut	1H-M3	2HL-M3	1
4	Washer	1H-M4	2HL-M4	1
5	Hex hollow hd set screw, 3/8-24 x 3/8 in.	1H-M5	2HL-M5	2
6	Plug	1H-M6	2HL-M6	2
7	Collar nut, 1-16	1H-M7	2HL-M7	1
8	Bearing cover (outer)	1H-M8	2HL-M8	1
9	Key	1H-M9	2HL-M9	1
10	Timken bearing, 23100-23256B	1H-M10	2HL-M10	1
11	Gits oiler, R-533	1H-M11	2HL-M11	1
12	Hex hd cap screw, 5/8-18 x 3/4 in.	1H-M12	2HL-M12	1
13	Hex hd cap screw, 1/2-13 x 1-9/16 in.	1H-M13	2HL-M13	6
14	Table bracket (RH)	1H-M14	2HL-M14	1
15	Acme blue label dowel, 5/16 x 1-1/4 in.	1H-M15	2HL-M15	2
16	Timken bearing, 23100-23256B	1H-M16	2HL-M16	1
17	Table bracket oil retainer	1H-M17	2HL-M17	1
18	Bearing cover (inner)	1H-M18	2HL-M18	1
19	Table screw	1H-M19		1
	Table screw		2HL-M19	1
20	Nut, 7/16-14	1H-M20	2HL-M20	4
21	Trip dog (RH)	1H-M21	2HL-M21	2
22	T-bolt, 7/16-14 x 1-3/4 in.	1H-M22	2HL-M22	4
23	Table gib	1H-M23	2HL-M23	1
24	Table coolant tube	1H-M24	2HL-M24	2
25	Limit stop	1H-M25	2HL-M25	2
26	Table limit stop pin	1H-M26	2HL-M26	2
27	Trip dog (LH)	1H-M27	2HL-M27	1
28	Table	1H-M28		1
	Table		2HL-M28	1
29	Rockwood handle, 1QA	1H-M29	2HL-M29	1
30	Crank retaining screw	1H-M30	2HL-M30	1
31	Oilite bearing, A-1010	1H-M31	2HL-M31	1
32	Table screw crank	1H-M32	2HL-M32	1
33	Gits oiler, RS-532	1H-M33	2HL-M33	1
34	Spring	1H-M34	2HL-M34	1
35	Crank pin, 1/8 x 5/8 in.	1H-M35	2HL-M35	1
36	Table screw crank sleeve	1H-M36	2HL-M36	1
37	Graduated collar (250 divisions)	1H-M37	2HL-M37	1
38	Headless set screw, 3/8-16 x 3/8 in.	1H-M38	2HL-M38	1
39	Table screw crank clutch	1H-M39	2HL-M39	1
40	Taper pin, #2 x 1-5/16 in.	1H-M40	2HL-M40	1
41	Gits oiler, RS-532	1H-M41	2HL-M41	1
42	Oilite bearing, A-104	1H-M42	2HL-M42	1
43	Table bracket (LH)	1H-M43	2HL-M43	1
44	Acme blue label dowel, 3/8 x 1-1/4 in.	1H-M44	2HL-M44	2
45	Fil hd screw, 1/2-13 x 1-1/8 in.	1H-M45	2HL-M45	3
46	Washer	1H-M46	2HL-M46	4
47	Table screen guard support	1H-M47	2HL-M47	2
48	Rd hd mach screw, 1/4 x 3/8 in.	1H-M48	2HL-M48	2
49	Headless set screw, 1/4-20 x 11/16 in.	1H-M49	2HL-M49	2
50	Table screen	1H-M50		1
	Table screen		2HL-M50	1
51	Table screen guard	1H-M51		1
	Table screen guard		2HL-M51	1

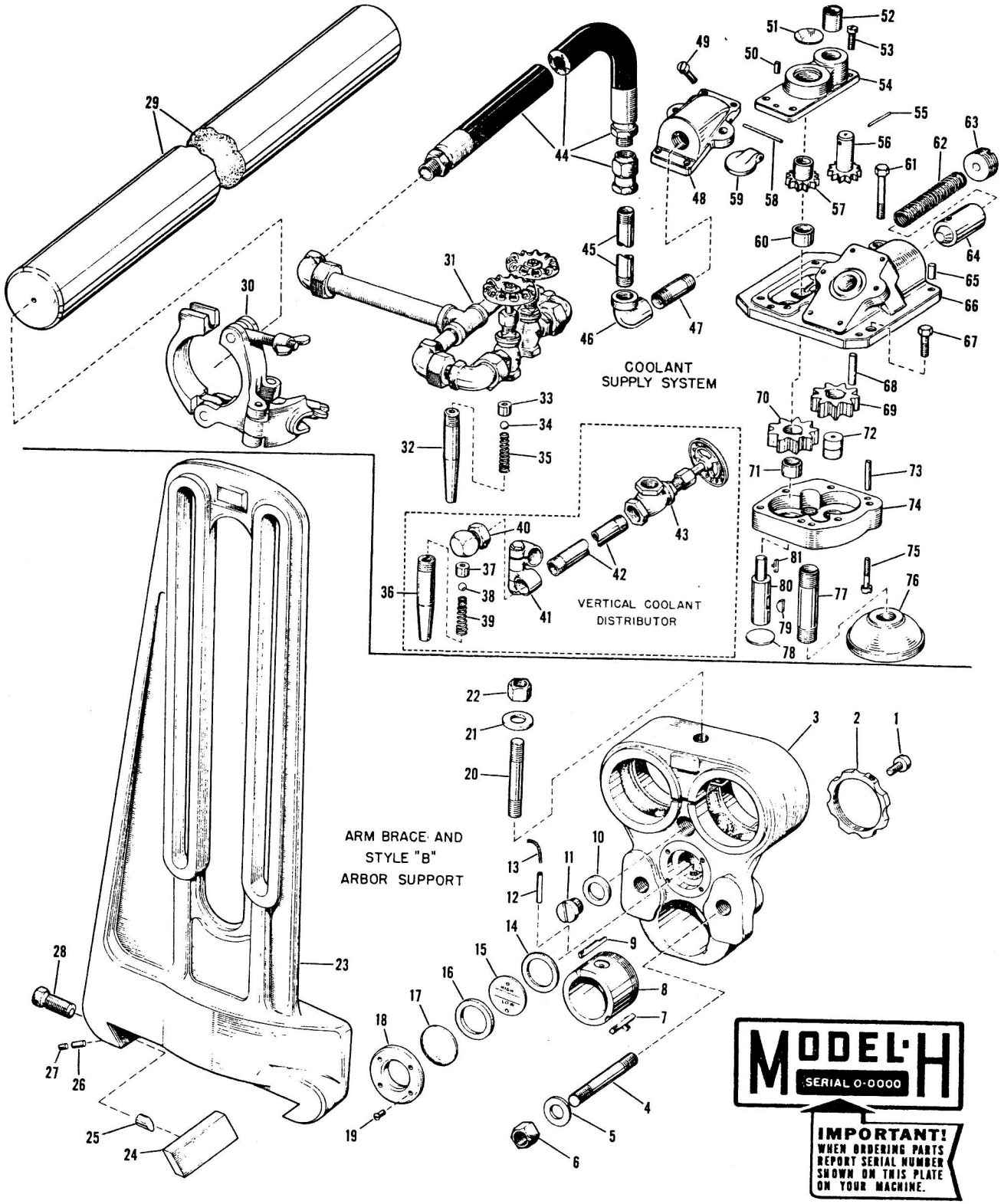

Figure 16. Style "B" Arbor Support, Arm Brace, Overarms and Coolant Supply System

Figure 16. Style "B" Arbor Support, Arm Brace, Overarms and Coolant Supply System

Item No.	Part Name and Description	Code No. 1H	2HL	Qty.
	STYLE "B" ARBOR SUPPORT AND ARM BRACE			
1	Screw	1H-N1	2HL-N1	1
2	Bushing nut	1H-N2	2HL-N2	1
3	Style "B" arbor support	1H-N3	2HL-N3	1
4	Arm brace clamp stud	1H-N4	2HL-N4	2
5	Washer	1H-N5	2HL-N5	2
6	Nut	1H-N6	2HL-N6	2
7	Key	1H-N7	2HL-N7	1
8	Arbor bushing	1H-N8	2HL-N8	1
9	Oil retainer	1H-N9	2HL-N9	1
10	Fiber washer	1H-N10	2HL-N10	1
11	Oil hole screw	1H-N11	2HL-N11	1
12	Copper tube, 1/4 x 1-11/16 in.	1H-N12	2HL-N12	1
13	Oil wicking	1H-N13	2HL-N13	1
14	Oil gage washer	1H-N14	2HL-N14	1
15	Oil gage plate	1H-N15	2HL-N15	1
16	Oil gage washer	1H-N16	2HL-N16	1
17	Oil gage glass	1H-N17	2HL-N17	1
18	Oil flow gage plate	1H-N18	2HL-N18	1
19	Screw	1H-N19	2HL-N19	4
20	Stud	1H-N20	2HL-N20	1
21	Washer	1H-N21	2HL-N21	1
22	Nut	1H-N22	2HL-N22	1
23	Arm brace	1H-N23	2HL-N23	1
24	Clamp gib	1H-N24	2HL-N24	1
25	Table clamp plug	1H-N25	2HL-N25	1
26	Acme blue label dowel, 1/4 x 1/2 in.	1H-N26	2HL-N26	2
27	Allen hd set screw, 5/16 x 5/16 in.	1H-N27	2HL-N27	2
28	Screw	1H-N28	2HL-N28	1
29	Overarm (horiz machines)	1H-N29	2HL-N29	2
	COOLANT SUPPLY SYSTEM			
30	Coolant distributor support (horiz machines)	1H-N30	2HL-N30	1
31	Distributor (horiz machines)	1H-N31	2HL-N31	1
32	Coolant nozzle	1H-N32	2HL-N32	2
33	Nozzle ball retainer (horiz machines)	1H-N33	2HL-N33	2
34	Ball, 1/4 in. (horiz machines)	1H-N34	2HL-N34	2
35	Nozzle spring (horiz machines)	1H-N35	2HL-N35	2
36	Coolant nozzle (vert machines)	1H-N36	2HL-N36	1
37	Nozzle ball retainer (vert machines)	1H-N37	2HL-N37	1
38	Ball, 1/4 in. (vert machines)	1H-N38	2HL-N38	1
39	Nozzle spring (vert machines)	1H-N39	2HL-N39	1
40	Swivel fitting, 1/4 in. (vert machines)	1H-N40	2HL-N40	1
41	Coolant distributor support (vert machines)	1H-N41	2HL-N41	1

Item No.	Part Name and Description	Code No. 1H	2HL	Qty.
42	Pipe, 1/4 in. (vert machines)	1H-N42	2HL-N42	1
43	Angle valve, 1/4 in. (vert machines)	1H-N43	2HL-N43	1
44	Coolant hose, 1/2 x 3/8 in. (horiz machines)	1H-N44a	2HL-N44a	1
	Coolant hose, 1/2 x 3/8 in. (vert machines)	1H-N44b	2HL-N44b	1
45	Wrought iron pipe, 1/2 x 30-1/8 in. (horiz machines)	1H-N45a	2HL-N45a	1
	Wrought iron pipe 1/2 x 29 in (vert machines)	1H-N45b	2HL-N45b	1
46	Elbow, 1/2 x 90°	1H-N46	2HL-N46	1
47	Nipple, 1/2 x 1-3/4 in.	1H-N47	2HL-N47	1
48	Check valve cover	1H-N48	2HL-N48	1
49	Screw	1H-N49	2HL-N49	6
50	Acme blue label dowel, 1/4 x 1/2 in.	1H-N50	2HL-N50	2
51	Expansion plug, 1-1/8 in.	1H-N51	2HL-N51	1
52	Coolant pump drive gear bushing	1H-N52	2HL-N52	1
53	Screw	1H-N53	2HL-N53	4
54	Coolant pump cover plate	1H-N54	2HL-N54	1
55	Pump gear drive pin	1H-N55	2HL-N55	1
56	Coolant pump drive gear	1H-N56	2HL-N56	1
57	Coolant pump driven gear	1H-N57	2HL-N57	1
58	Check valve cover pin	1H-N58	2HL-N58	1
59	Check valve	1H-N59	2HL-N59	1
60	Oilite bearing, SM575	1H-N60	2HL-N60	1
61	Hex hd cap screw	1H-N61	2HL-N61	1
62	Spring	1H-N62	2HL-N62	
63	Plug	1H-N63	2HL-N63	1
64	Coolant relief plunger	1H-N64	2HL-N64	1
65	Acme blue label dowel, 5/16 x 1 in.	1H-N65	2HL-N65	2
66	Coolant pump cover	1H-N66	2HL-N66	1
67	Hex hd cap screw	1H-N67	2HL-N67	1
68	Acme blue label dowel, 1/4 x 1-1/2 in.	1H-N68	2HL-N68	1
69	Coolant pump gear (driven)	1H-N69	2HL-N69	1
70	Coolant pump gear (driver)	1H-N70	2HL-N70	1
71	Oilite bearing, SM575	1H-N71	2HL-N71	1
72	Coolant idler gear stud	1H-N72	2HL-N72	1
73	Acme blue label dowel, 1/4 x 1-1/4 in.	1H-N73	2HL-N73	2
74	Coolant pump body	1H-N74	2HL-N74	1
75	Screw	1H-N75	2HL-N75	6
76	Strainer	1H-N76	2HL-N76	1
77	Nipple, 1/2 x 2-1/2 in.	1H-N77	2HL-N77	1
78	Expansion plug, 1 in.	1H-N78	2HL-N78	1
79	Hi-Pro key, HP-505	1H-N79	2HL-N79	1
80	Coolant pump drive shaft	1H-N80	2HL-N80	1
81	Key	1H-N81	2HL-N81	1

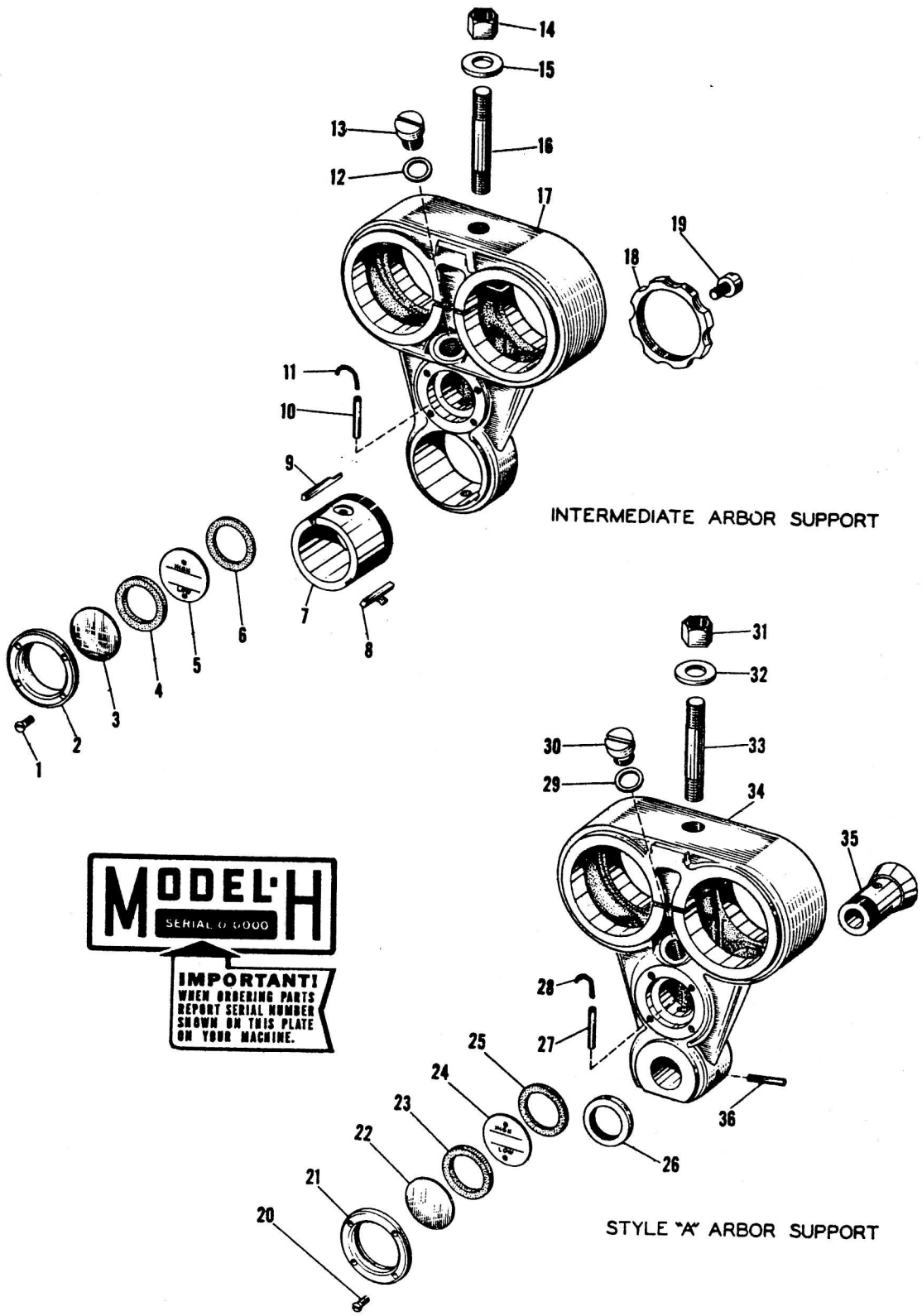

Figure 17. Intermediate Arbor Support and Style "A" Arbor Support

Figure 17. Intermediate Arbor Support and Style "A" Arbor Support

Item No.	Part Name and Description	Code No. 1H	Code No. 2HL	Qty.
	INTERMEDIATE ARBOR SUPPORT			
1	Screw	1H-P1	2HL-P1	4
2	Oil flow gage plate	1H-P2	2HL-P2	1
3	Oil gage glass	1H-P3	2HL-P3	1
4	Oil gage washer	1H-P4	2HL-P4	1
5	Oil gage back plate	1H-P5	2HL-P5	1
6	Oil gage washer	1H-P6	2HL-P6	1
7	Arbor support bushing	1H-P7	2HL-P7	1
8	Tit key	1H-P8	2HL-P8	1
9	Oil retainer	1H-P9	2HL-P9	1
10	Copper tube, 1/4 x 1-5/8 in.	1H-P10	2HL-P10	1
11	Oil wicking	1H-P11	2HL-P11	1
12	Fiber washer	1H-P12	2HL-P12	1
13	Oil filler plug	1H-P13	2HL-P13	1
14	Nut	1H-P14	2HL-P14	1
15	Washer	1H-P15	2HL-P15	1
16	Stud	1H-P16	2HL-P16	1
17	Intermediate arbor support	1H-P17	2HL-P17	1
18	Arm pendant bushing nut	1H-P18	2HL-P18	1
19	Fil hd screw	1H-P19	2HL-P19	1
	STYLE "A" ARBOR SUPPORT			
20	Screw	1H-P20	2HL-P20	4
21	Oil gage plate	1H-P21	2HL-P21	1
22	Oil gage glass	1H-P22	2HL-P22	1
23	Oil gage washer	1H-P23	2HL-P23	1
24	Oil gage back plate	1H-P24	2HL-P24	1
25	Oil gage washer	1H-P25	2HL-P25	1
26	Nut	1H-P26	2HL-P26	1
27	Copper tube, 1/4 x 2-3/8 in.	1H-P27	2HL-P27	1
28	Oil wicking	1H-P28	2HL-P28	1
29	Fiber washer	1H-P29	2HL-P29	1
30	Oil filler plug	1H-P30	2HL-P30	1
31	Nut	1H-P31	2HL-P31	1
32	Washer	1H-P32	2HL-P32	1
33	Stud	1H-P33	2HL-P33	1
34	Style "A" arbor support	1H-P34	2HL-P34	1
35	Bushing	1H-P35	2HL-P35	1
36	Pin	1H-P36	2HL-P36	1

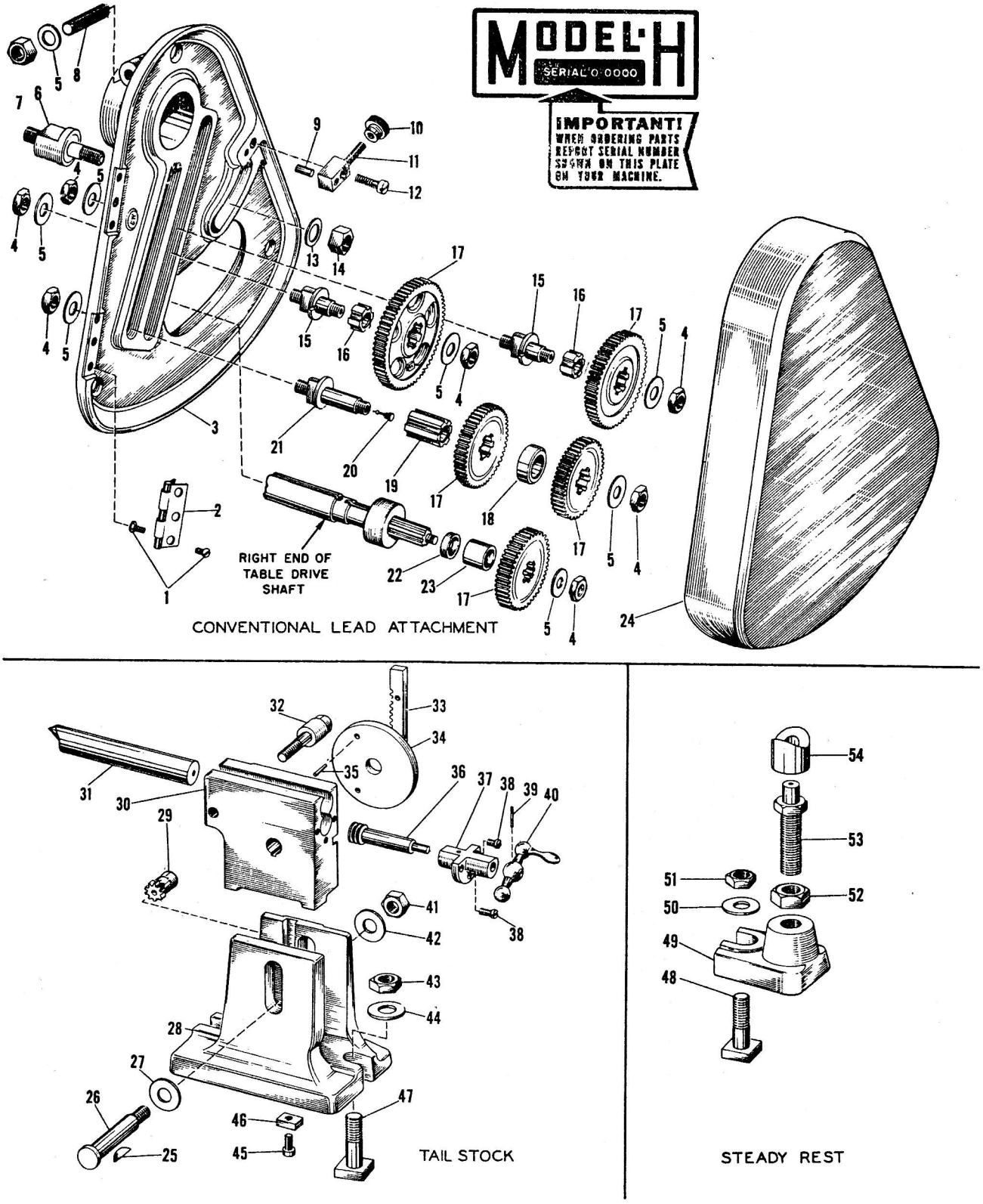

Figure 18. Conventional Lead Attachment, Tail Stock and Steady Rest

Figure 18. Conventional Lead Attachment, Tail Stock and Steady Rest

Item No.	Part Name and Description	Code No. 1H	2HL	Qty.
	CONVENTIONAL LEAD ATTACHMENT			
1	Fil hd mach screw, #10-32 x 1/2 in.	1H-Q1	2HL-Q1	12
2	Stanley butt hinge, #800	1H-Q2	2HL-Q2	2
3	Change gear bracket	1H-Q3	2HL-Q3	1
4	Nut	1H-Q4	2HL-Q4	6
5	Washer	1H-Q5	2HL-Q5	7
6	Change gear bracket stud	1H-Q6	2HL-Q6	1
7	Nut	1H-Q7	2HL-Q7	1
8	Stud	1H-Q8	2HL-Q8	1
9	Acme blue label dowel, 1/4 x 1 in.	1H-Q9	2HL-Q9	1
10	Nut	1H-Q10	2HL-Q10	1
11	Door lock bolt	1H-Q11	2HL-Q11	1
12	Fil hd screw	1H-Q12	2HL-Q12	1
13	Washer	1H-Q13	2HL-Q13	1
14	Nut	1H-Q14	2HL-Q14	1
15	Idier stud	1H-Q15	2HL-Q15	2
16	Splined bushing (short)	1H-Q16	2HL-Q16	2
17	Change gears	1H-Q17	2HL-Q17	
	Change gear, 24T-16P	1H-Q17a	2HL-Q17a	2
	Change gear, 28T-16P	1H-Q17b	2HL-Q17b	1
	Change gear, 32T-16P	1H-Q17c	2HL-Q17c	1
	Change gear, 40T-16P	1H-Q17d	2HL-Q17d	1
	Change gear, 44T-16P	1H-Q17e	2HL-Q17e	1
	Change gear, 48T-16P	1H-Q17f	2HL-Q17f	2
	Change gear, 56T-16P	1H-Q17g	2HL-Q17g	1
	Change gear, 64T-16P	1H-Q17h	2HL-Q17h	1
	Change gear, 72T-16P	1H-Q17j	2HL-Q17j	1
	Change gear, 86T-16P	1H-Q17k	2HL-Q17k	1
	Change gear, 100T-16P	1H-Q17l	2HL-Q17l	1
18	Spacing collar	1H-Q18	2HL-Q18	1
19	Splined bushing, long	1H-Q19	2HL-Q19	1
20	Gits Oiler, No. RS531	1H-Q20	2HL-Q20	1
21	Differential index compound stud	1H-Q21	2HL-Q21	1
22	Spacing collar, short	1H-Q22	2HL-Q22	1
23	Spacing collar, long	1H-Q23	2HL-Q23	1
24	Change gear bracket cover	1H-Q24	2HL-Q24	1
	TAILSTOCK			
25	Hi-Pro key, HP-606	1H-Q25	2HL-Q25	1
26	Elevanting clamp bolt	1H-Q26	2HL-Q26	1
27	Washer	1H-Q27	2HL-Q27	1
28	Tailstock	1H-Q28	2HL-Q28	1
29	Elevating pinion	1H-Q29	2HL-Q29	1
30	Elevating center	1H-Q30	2HL-Q30	1
31	Tailstock center	1H-Q31	2HL-Q31	1
32	Tailstock clamp screw	1H-Q32	2HL-Q32	1
33	Elevating rack	1H-Q33	2HL-Q33	1
34	Graduated plate	1H-Q34	2HL-Q34	1
35	Taper pin, #2 x 9/16 in.	1H-Q35	2HL-Q35	2
36	Center adjusting worm	1H-Q36	2HL-Q36	1
37	Worm sleeve	1H-Q37	2HL-Q37	1
38	Fil hd screw	1H-Q38	2HL-Q38	3
39	Taper pin, #1 x 13/16 in.	1H-Q39	2HL-Q39	1
40	Ball crank	1H-Q40	2HL-Q40	1
41	Hex nut	1H-Q41	2HL-Q41	1
42	Washer	1H-Q42	2HL-Q42	1
43	Nut	1H-Q43	2HL-Q43	2
44	Washer	1H-Q44	2HL-Q44	2
45	Screw	1H-Q45	2HL-Q45	2
46	Vise torque	1H-Q46	2HL-Q46	2
47	T-Bolt	1H-Q47	2HL-Q47	2
	STEADY REST			
48	T-bolt	1H-Q48	2HL-Q48	2
49	Steady rest base	1H-Q49	2HL-Q49	1
50	Washer	1H-Q50	2HL-Q50	1
51	Nut	1H-Q52	2HL-Q51	1
52	Nut	1H-Q52	2HL-Q52	1
53	Steady rest adjustment screw	1H-Q53	2HL-Q53	1
54	Steady rest vee block	1H-Q54	2HL-Q54	1

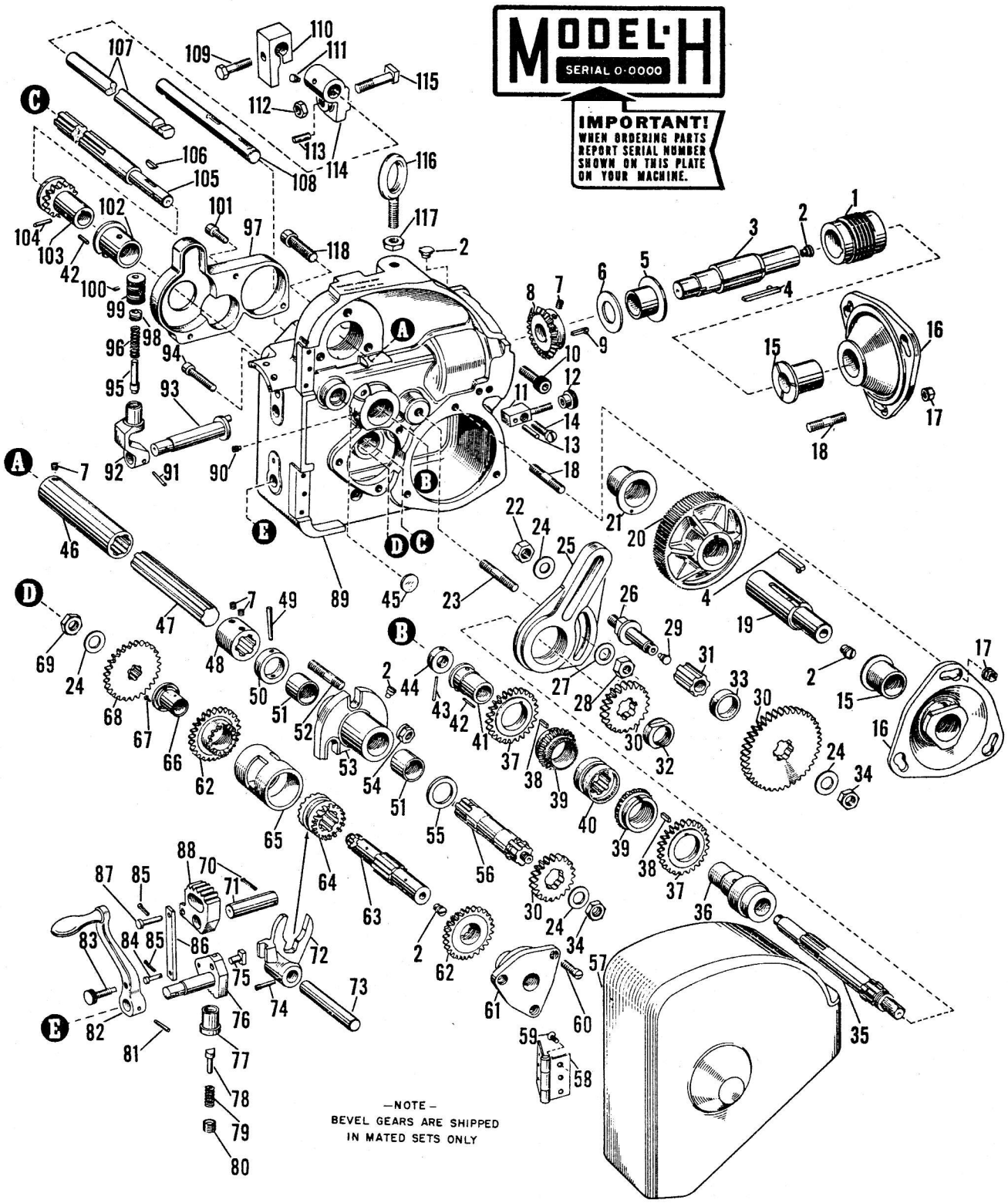

Figure 19. Low Lead Attachment

Figure 19. Low Lead Attachment

Item No.	Part Name and Description	Code No. 1H	2HL	Qty.
1	Worms			
	Worm, 24-1	1H-R1a	2HL-R1a	1
	Worm, 96-1	1H-R1b	2HL-R1b	1
	Worm, 24-8	1H-R1c	2HL-R1c	1
2	Gits oiler, RS533	1H-R2	2HL-R2	9
3	Worm and worm wheel shaft	1H-R3	2HL-R3	1
4	Key	1H-R4	2HL-R4	2
5	Worm and worm wheel shaft bushing	1H-R5	2HL-R5	1
6	Thrust washer for reverse bevel gear	1H-R6	2HL-R6	1
7	Allen hd dog pt set screw, 5/16-18 x 5/16 in.	1H-R7	2HL-R7	4
8	Reverse drive bevel gear	1H-R8	2HL-R8	1
9	Key	1H-R9	2HL-R9	1
10	Allen hd screw, 1/2-13 x 1-1/4 in.	1H-R10	2HL-R10	2
11	Door lock bolt	1H-R11	2HL-R11	1
12	Knurled nut	1H-R12	2HL-R12	1
13	Acme blue label dowel, 3/8 x 1-1/2 in.	1H-R13	2HL-R13	7
14	Screw	1H-R14	2HL-R14	1
15	Worm and worm wheel support bearing bushing	1H-R15	2HL-R15	2
16	Worm and worm wheel support bearing	1H-R16	2HL-R16	2
17	Nut, 3/8-16	1H-R17	2HL-R17	6
18	Stud, 3/8-16 x 1-3/16 in.	1H-R18	2HL-R18	6
19	Table screw extension	1H-R19	2HL-R19	1
20	Worm wheels			
	Worm wheel, 24-1	1H-R20a	2HL-R20a	1
	Worm wheel, 96-1	1H-R20b	2HL-R20b	1
	Worm wheel, 24-8	1H-R20c	2HL-R20c	1
21	Table screw extension bushing	1H-R21	2HL-R21	1
22	Nut, 1/2-13	1H-R22	2HL-R22	1
23	Stud, 7/16-20 x 1-3/4 in.	1H-R23	2HL-R23	1
24	Washer	1H-R24	2HL-R24	4
25	Change gear arm	1H-R25	2HL-R25	1
26	Change gear stud	1H-R26	2HL-R26	1
27	Washer	1H-R27	2HL-R27	1
28	Nut, 7/16-20	1H-R28	2HL-R28	1
29	Gits oiler, RS531	1H-R29	2HL-R29	1
30	Change gears			
	Change gear, 20T 11P	1H-R30a	2HL-R30a	2
	Change gear, 21T 11P	1H-R30b	2HL-R30b	1
	Change gear, 22T 11P	1H-R30c	2HL-R30c	1
	Change gear, 23T 11P	1H-R30d	2HL-R30d	1
	Change gear, 24T 11P	1H-R30e	2HL-R30e	1
	Change gear, 25T 11P	1H-R30f	2HL-R30f	1
	Change gear, 26T 11P	1H-R30g	2HL-R30g	1
	Change gear, 27T 11P	1H-R30h	2HL-R30h	1
	Change gear, 28T 11P	1H-R30j	2HL-R30j	1
	Change gear, 29T 11P	1H-R30k	2HL-R30k	1
	Change gear, 30T 11P	1H-R30l	2HL-R30l	1
	Change gear, 32T 11P	1H-R30m	2HL-R30m	1
	Change gear, 34T 11P	1H-R30n	2HL-R30n	1
	Change gear, 36T 11P	1H-R30p	2HL-R30p	1
	Change gear, 38T 11P	1H-R30q	2HL-R30q	1
	Change gear, 40T 11P	1H-R30r	2HL-R30r	1
31	Splined bushing	1H-R31	2HL-R31	1
32	Hand crank shaft nut	1H-R32	2HL-R32	1
33	Spacing collar	1H-R33	2HL-R33	1
34	Nut, 1/2-13	1H-R34	2HL-R34	2
35	Hand crank shaft	1H-R35	2HL-R35	1
36	Hand crank shaft bearing (long)	1H-R36	2HL-R36	1
37	Hand crank shaft spur gear	1H-R37	2HL-R37	2
38	Key	1H-R38	2HL-R38	2
39	Hand crank shaft bevel pinion	1H-R39	2HL-R39	2
40	Clutch on hand crank shaft	1H-R40	2HL-R40	1
41	Hand crank shaft bushing (short)	1H-R41	2HL-R41	1
42	Pin, 1/8 x 1/2 in.	1H-R42	2HL-R42	2
43	Taper pin, #3 x1-1/4 in.	1H-R43	2HL-R43	1
44	Hand crank shaft collar	1H-R44	2HL-R44	1
45	Expansion plug, 3/4 in.	1H-R45	2HL-R45	1
46	Spiral head drive shaft connector (long)	1H-R46	2HL-R46	1
47	Spiral head drive shaft extension	1H-R47	2HL-R47	1
48	Spiral head drive shaft connector (short)	1H-R48	2HL-R48	1
49	Taper pin, #4 x1-5/8 in.	1H-R49	2HL-R49	1
50	Spiral head drive shaft collar	1H-R50	2HL-R50	1
51	Spiral head drive shaft support bracket bushing	1H-R51	2HL-R51	2
52	Stud, 1/2-20 x 1-7/8 in.	1H-R52	2HL-R52	3
53	Spiral head drive shaft support bracket	1H-R53	2HL-R53	1
54	Hex collar nut, 1/2-20	1H-R54	2HL-R54	3
55	Spiral head drive shaft washer	1H-R55	2HL-R55	1
56	Spiral head drive shaft	1H-R56	2HL-R56	1
57	Spiral change gear box cover	1H-R57	2HL-R57	1
58	Stanley butt hinge, #800	1H-R58	2HL-R58	2
59	Flat hd mach screw, #10-32 x 1/2 in.	1H-R59	2HL-R59	12
60	Screw	1H-R60	2HL-R60	3
61	Reverse gear shaft bearing (RH)	1H-R61	2HL-R61	1
62	Reverse gear	1H-R62	2HL-R62	2
63	Reverse gear shaft	1H-R63	2HL-R63	1
64	Reverse gear shaft clutch	1H-R64	2HL-R64	1
65	Reverse gear spacer	1H-R65	2HL-R65	1
66	Reverse gear shaft bushing (LH)	1H-R66	2HL-R66	1
67	Flat hd mach screw, 3/16-32 x 1/2 in.	1H-R67	2HL-R67	3
68	Reverse shaft drive gear	1H-R68	2HL-R68	1
69	Nut, 1/2-13	1H-R69	2HL-R69	1
70	Cotter pin, 7/64 x 3/4 in.	1H-R70	2HL-R70	1
71	Trip segment shaft	1H-R71	2HL-R71	1
72	Clutch shifter	1H-R72	2HL-R72	1
73	Clutch shifter shaft	1H-R73	2HL-R73	1
74	Taper pin set screw	1H-R74	2HL-R74	1
75	Detent block shifter shoe	1H-R75	2HL-R75	1
76	Detent block and shaft	1H-R76	2HL-R76	1
77	Detent plunger sleeve	1H-R77	2HL-R77	1
78	Detent plunger	1H-R78	2HL-R78	1
79	Detent spring	1H-R79	2HL-R79	1
80	Detent plunger screw	1H-R80	2HL-R80	1
81	Taper pin, #3 x 1-1/8 in.	1H-R81	2HL-R81	1
82	Direction lever and handle	1H-R82a	2HL-R82a	1
	Handle only	1H-R82b	2HL-R82b	1
83	Knurled head screw, 3/8-16 x 1-7/16 in.	1H-R83	2HL-R83	1
84	Connecting link pin (short)	1H-R84	2HL-R84	1
85	Cotter pin, 3/32 x 3/4 in.	1H-R85	2HL-R85	1
86	Connecting link	1H-R86	2HL-R86	1
87	Connecting link pin (long)	1H-R87	2HL-R87	1
88	Trip segment	1H-R88	2HL-R88	1
89	Spiral change gear box	1H-R89	2HL-R89	1
90	Dog pt set screw, 1/4-20 x 15/32 in.	1H-R90	2HL-R90	1
91	Taper pin, #2 x 1-1/16 in.	1H-R91	2HL-R91	1
92	Selection lever	1H-R92	2HL-R92	1
93	Reverse eccentric shaft	1H-R93	2HL-R93	1
94	Cap screw, 3/8-16 x 2-3/16 in.	1H-R94	2HL-R94	1
95	Selection lever plunger	1H-R95	2HL-R95	1
96	Spring	1H-R96	2HL-R96	1
97	Clutch shaft gear guard	1H-R97	2HL-R97	1
98	Plunger guide, 9/16-12 x 5/16 in.	1H-R98	2HL-R98	1
99	Selection lever knob	1H-R99	2HL-R99	1
100	Allen hd set screw, #8-32 x 3/8 in.	1H-R100	2HL-R100	1
101	Soc hd cap screw, 3/8 x 3/4 in.	1H-R101	2HL-R101	3
102	Auxiliary drive shaft bushing	1H-R102	2HL-R102	1
103	Auxiliary drive shaft pinion	1H-R103	2HL-R103	1
104	Taper pin, #4 x 1-1/16 in.	1H-R104	2HL-R104	1
105	Auxiliary drive shaft	1H-R105	2HL-R105	1
106	Hi-Pro key, HP-705	1H-R106	2HL-R106	1
107	Trip shaft (1H)	1H-R107		1
	Trip shaft (2HL)		2HL-R107	1
108	Trip rack	1H-R108	2HL-R108	1
109	Hex hd screw	1H-R109	2HL-R109	2
110	Trip dog	1H-R110	2HL-R110	2
111	Gits oiler, RS-532	1H-R111	2HL-R111	2
112	Nut, 7/16-14	1H-R112	2HL-R112	2
113	Acme blue label dowel, 1/4 x 1-1/2 in.	1H-R113	2HL-R113	2
114	Trip shaft support bracket	1H-R114	2HL-R114	2
115	T-bolt	1H-R115	2HL-R115	2
116	Eye bolt, 1/2 in.	1H-R116	2HL-R116	1
117	Nut, 1/2-13	1H-R117	2HL-R117	1
118	Allen hd cap screw, 1/2 x 1-3/4 in.	1H-R118	2HL-R118	1

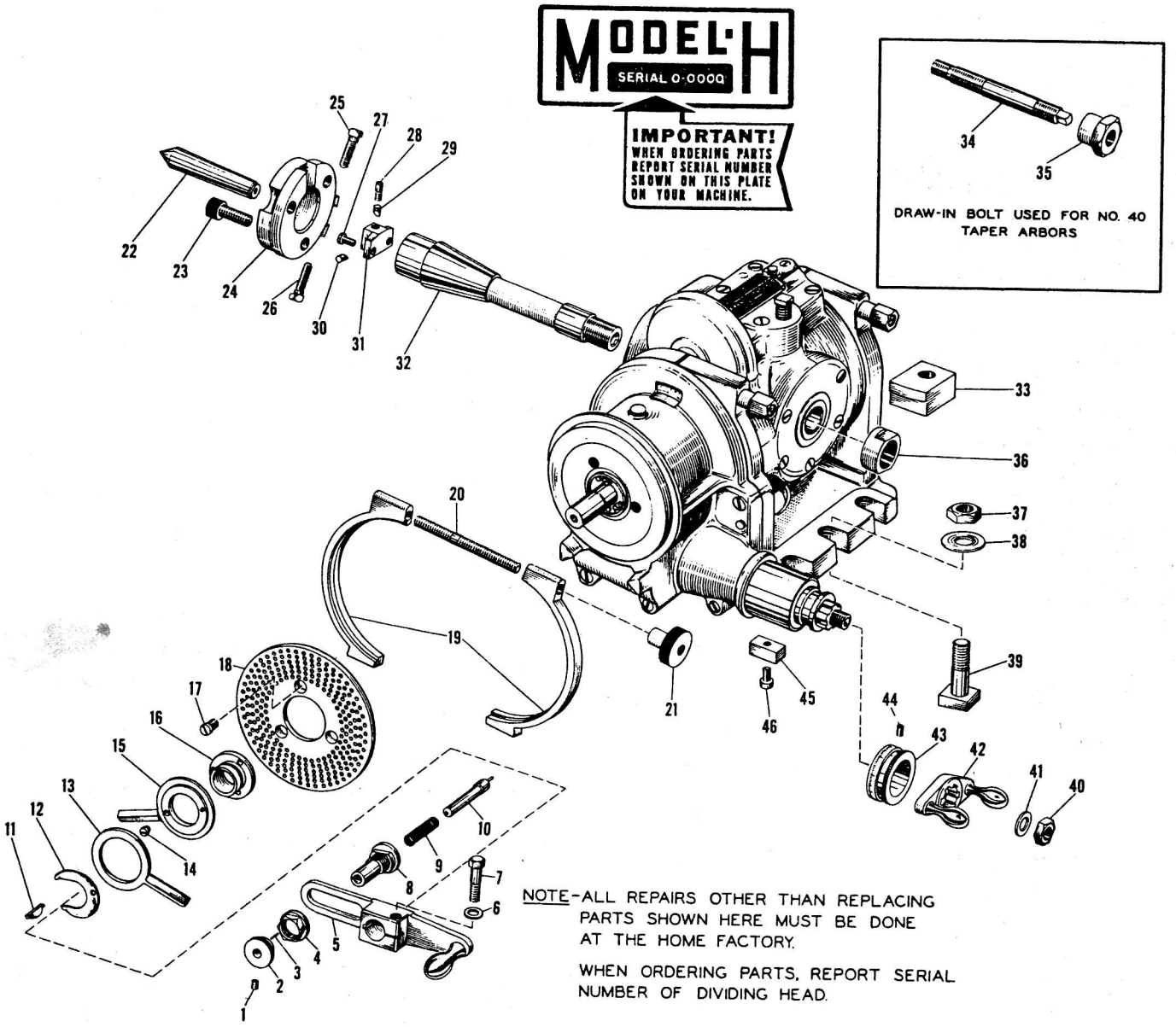

Figure 20. Model H Dividing Head

Figure 20. Model H Dividing Head

Item No.	Part Name and Description	Code No. 1H	2HL	Qty.
1	Screw	1H-S1	2HL-S1	1
2	Plunger knob	1H-S2	2HL-S2	1
3	Drill rod, #43 x 7/8 in.	1H-S3	2HL-S3	1
4	Clamp nut	1H-S4	2HL-S4	1
5	Index crank	1H-S5	2HL-S5	1
6	Washer	1H-S6	2HL-S6	1
7	Hex hd cap screw	1H-S7	2HL-S7	1
8	Plunger sleeve	1H-S8	2HL-S8	1
9	Spring	1H-S9	2HL-S9	1
10	Plunger for standard index plates	1H-S10a	2HL-S10a	1
	Plunger for high number index plates	1H-S10b	2HL-S10b	1
11	Hi-Pro key, #706	1H-S11	2HL-S11	1
12	Spring	1H-S12	2HL-S12	1
13	Index finger	1H-S13	2HL-S13	1
14	Screw	1H-S14	2HL-S14	1
15	Index finger	1H-S15	2HL-S15	1
16	Index sleeve	1H-S16	2HL-S16	1
17	Screw	1H-S17	2HL-S17	1
18	Index plates	1H-S18	2HL-S18	
	Standard index plates			
	Index plate, 37-39-41-43-47-49	1H-S18a	2HL-S18a	1
	Index plate, 21-23-27-29-31-33	1H-S18b	2HL-S18b	1
	Index plate, 15-16-17-18-19-20	1H-S18c	2HL-S18c	1
	High number index plates			
	Index plate, 57-67-77-87-97	1H-S18d	2HL-S18d	1
	Index plate, 53-63-73-83-93	1H-S18e	2HL-S18e	1
	Index plate, 51-61-71-81-91-101	1H-S18f	2HL-S18f	1
	Index plate, 48-59-69-79-89-99	1H-S18g	2HL-S18g	1
19	Index plate clamp ring	1H-S19	2HL-S19	1
20	Screw	1H-S20	2HL-S20	1
21	Nut	1H-S21	2HL-S21	1
22	Center	1H-S22	2HL-S22	1
23	Allen hd cap screw, 1/2 x 1 in.	1H-S23	2HL-S23	3
24	Dog driver	1H-S24	2HL-S24	1
25	Screw	1H-S25	2HL-S25	2
26	Screw	1H-S26	2HL-S26	1
27	Screw	1H-S27	2HL-S27	2
28	Spindle drive key screw	1H-S28	2HL-S28	1
29	Expansion key wedge	1H-S29	2HL-S29	1
30	Expansion key plug	1H-S30	2HL-S30	1
31	Spindle drive expansion key	1H-S31	2HL-S31	1
32	Center plug	1H-S32	2HL-S32	1
33	Clamp block	1H-S33	2HL-S33	1
34	Draw-in bolt	1H-S34	2HL-S34	1
35	Draw-in bolt nut	1H-S35	2HL-S35	1
36	Nut	1H-S36	2HL-S36	1
37	Nut	1H-S37	2HL-S37	4
38	Washer	1H-S38	2HL-S38	4
39	T-bolt	1H-S39	2HL-S39	4
40	Nut	1H-S40	2HL-S40	1
41	Washer	1H-S41	2HL-S41	1
42	Crank	1H-S42	2HL-S42	1
43	Graduated collar	1H-S43	2HL-S43	1
44	Allen set screw, 5/16 x 3/8 in.	1H-S44	2HL-S44	1
45	Vise tongue	1H-S45	2HL-S45	2
46	Screw	1H-S46	2HL-S46	2